Amstrad

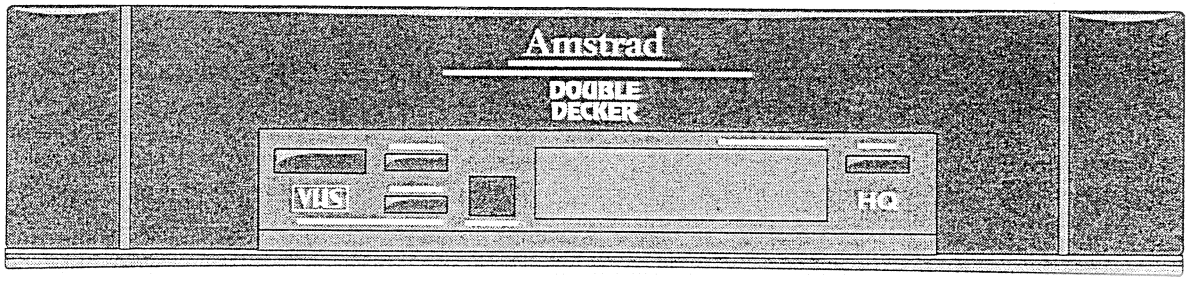

DD9901

PROGRAMMABLE DOUBLE VIDEO CASSETTE RECORDER

SERVICE MANUAL

SPECIFICATIONS

Test Item	Mode	Condition	Unit	Nominal
1. VIDEO				
1-1 Output	SP	R/P	Vp-p	1.0
1-2 S/N Luminance	SP	R/P	dB	44
1-3 S/N Chroma AM (PAL)	SP	R/P	dB	38
1-4 S/N Chroma PM (PAL)	SP	R/P	dB	36
1-5 S/N Chroma (SECAM)	SP	R/P	dB	38
1-6 Resolution	SP	PB	Line	220
2. SERVO				
2-1 Wow & Flutter RMS	SP	R/P	%	0.25
2-2 Jitter Low	SP	PB	µsec	0.05
3. AUDIO				
3-1 Output	SP	R/P	dBv	-6
3-2 S/N	SP	R/P	dB	40
3-3 Distortion	SP	R/P	%	1.5
3-4 Freq. resp. 200Hz	SP	R/P	dB	0
6kHz	SP	R/P	dB	0
(-20dB ref. 400Hz)				
4. TUNER				
4-1 Channel range				
VHF Low SECAM L	E-E		ch	FB~FC
PAL B/G	E-E		ch	E2~S1
VHF High SECAM L	E-E		ch	F1~Q
PAL B/G	E-E		ch	E5~S20
UHF SECAM L/PAL B/G	E-E		ch	E21~E69
4-2 Video Output	E-E		Vp-p	1.0
4-3 Video S/N	E-E		dB	43
4-4 Audio Output	E-E		dBv	-6
4-5 Audio S/N	E-E		dB	40

*SECAM FA ch.....Not guarantee at performance.

Note: Test Conditions
Temperature 20~25°C
Humidity 40~60%

Note:

1] Nominal specifications represent the design specifications. All units should be able to approximate these-some will exceed and some may drop slightly below these specifications. Limit specifications represent the absolute worst condition that still might be considered acceptable; in no case should a unit fail to meet limit specifications.

IMPORTANT SAFETY PRECAUTIONS

Prior to shipment from the factory, our products are strictly inspected for recognized product safety and electrical codes of the countries in which they are to be sold. However, in order to maintain such compliance, it is equally important to implement the following precautions when a set is being serviced.

Product Safety Notice

Some electrical and mechanical parts have special safety-related characteristics which are often not evident from visual inspection, nor can the protection they give necessarily be obtained by replacing them with components rated for higher voltage, wattage, etc. Parts that have special safety characteristics are identified by a (⚠) on schematics and in parts lists. Use of a substitute replacement that does not have the same safety characteristics as the recommended replacement part might create shock, fire, and/or other hazards. The Product's Safety is under review continu- ously and new instructions are issued whenever appropriate. Prior to shipment from the factory, our products are strictly inspected to confirm with the recognized product safety and electrical codes of the countries in which they are to be sold. However, in order to maintain such compliance, it is equally important to implement the following precautions when a set is being serviced.

Precautions during Servicing

A. Parts identified by the (⚠) symbol are critical for safety.
Replace only with part number specified.

B. In addition to safety, other parts and assemblies are specified for conformance with regulations applying to spurious radiation. These must also be replaced only with specified replacements.
Examples: RF converters, RF cables, noise blocking capacitors, and noise blocking filters, etc.

C. Use specified internal wiring. Note especially:
1) Wires covered with PVC tubing
2) Double insulated wires
3) High voltage leads

D. Use specified insulating materials for hazardous live parts. Note especially:
1) Insulation tape
2) PVC tubing
3) Spacers
4) Insulators for transistors.

E. When replacing AC primary side components (transformers, power cord, etc.), wrap ends of wires securely about the terminals before soldering.

F. Observe that the wires do not contact heat producing parts (heatsinks, oxide metal film resistors, fusible resistors, etc.).

G. Check that replaced wires do not contact sharp edges or pointed parts.

H. When a power cord has been replaced, check that 10-15 kg of force in any direction will not loosen it.

I. Also check areas surrounding repaired locations.

J. Use care that foreign objects (screws, solder droplets, etc.) do not remain inside the set.

K. Crimp type wire connector
The power transformer uses crimp type connectors which connect the power cord and the primary side of the transformer. When replacing the transformer, follow these steps carefully and precisely to prevent shock hazards.
Replacement procedure
1) Remove the old connector by cutting the wires at a point close to the connector.
Important: Do not re-use a connector. (Discard it.)
2) Strip about 15 mm of the insulation from the ends of the wires. If the wires are stranded, twist the strands to avoid frayed conductors.
3) Align the lengths of the wires to be connected. Insert the wires fully into the connector.
4) Use the crimping tool to crimp the metal sleeve at its center. Be sure to crimp fully to the complete closure of the tool.

L. When connecting or disconnecting the internal connectors, first, disconnect the AC plug from the AC outlet.

Safety Check after Servicing

Examine the area surrounding the repaired location for damage or deterioration. Observe that screws, parts, and wires have been returned to their original positions. Afterwards, do the following tests and confirm the specified values to verify compliance with safety standards.

1. Clearance Distance

When replacing primary circuit components, confirm specified clearance distance (d) and (d') between soldered terminals, and between terminals and surrounding metallic parts. (See Fig. 1)

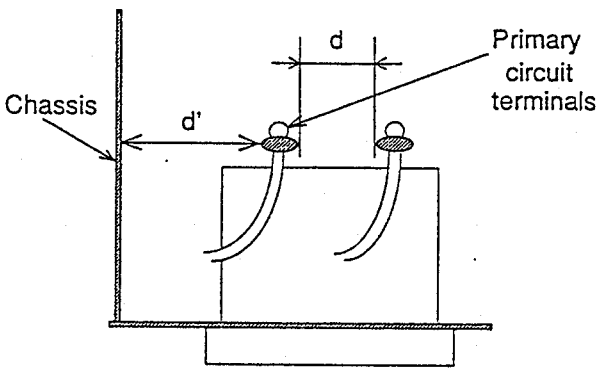

Fig. 1

Table 1 : Ratings for selected area

AC Line Voltage	Region	Clearance Distance (d) (d')
200 to 240 V	Europe Australia	≥ 4mm (d) ≥ 6mm (d')

Note: This table is unofficial and for reference only. Be sure to confirm the precise values.

2. Leakage Current Test

Confirm specified (or lower) leakage current between B (earth ground, power cord plug prongs) and externally exposed accessible parts (RF terminals, antenna terminals, video and audio input and output terminals, microphone jacks, earphone jacks, etc.).

Measuring Method (Power ON) :

Insert load Z between B (earth ground, power cord plug prongs) and exposed accessible parts. Use an AC voltmeter to measure across the terminals of load Z. See Fig. 2 and the following table.

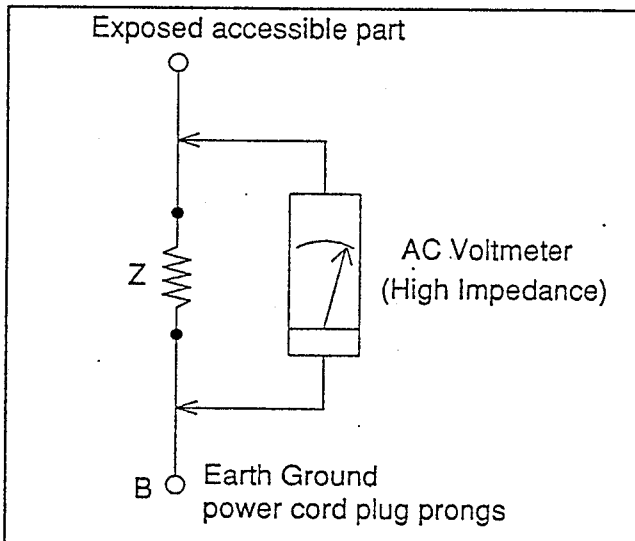

Fig. 2

Table 2 : Leakage current ratings for selected areas

AC Line Voltage	Region	Load Z	Leakage Current (i)	Earth Ground (B) to:
200 to 240 V	Europe Australia	2kΩ RES. in connected	1 ≤0.7mA Peak 1 ≤2mA dc	Antenna terminals
		50kΩ RES. in connected	1 ≤0.7mA Peak 1 ≤2mA dc	Other terminals

Note: This table is unofficial and for reference only.
Be sure to confirm the precise values.

STANDARD NOTES FOR SERVICING

Circuit Board Indications

a. The output pin of the 3 pin Regulator ICs is indicated as shown:

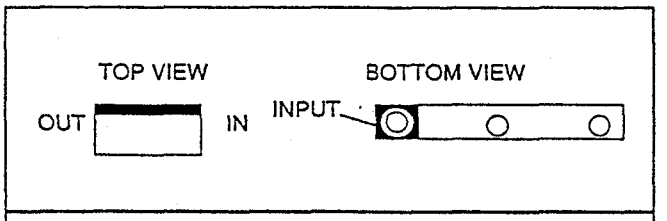

b. For other ICs, pin 1 and every fifth pin are indicated as shown:

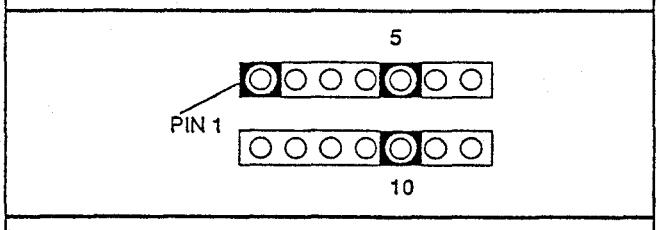

c. The 1st pin of every pin connector is indicated as shown:

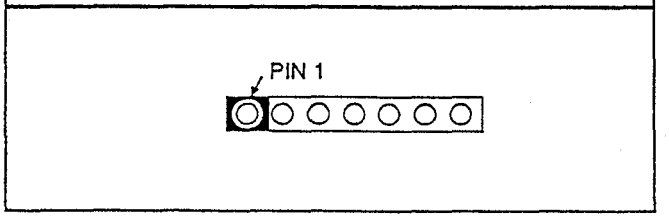

Instructions for Connectors

1. When you connect or disconnect FFC cable (connector), be sure to disconnect the AC cord.
2. FFC cable (connector) should be inserted parallel into the connector, not at an angle.

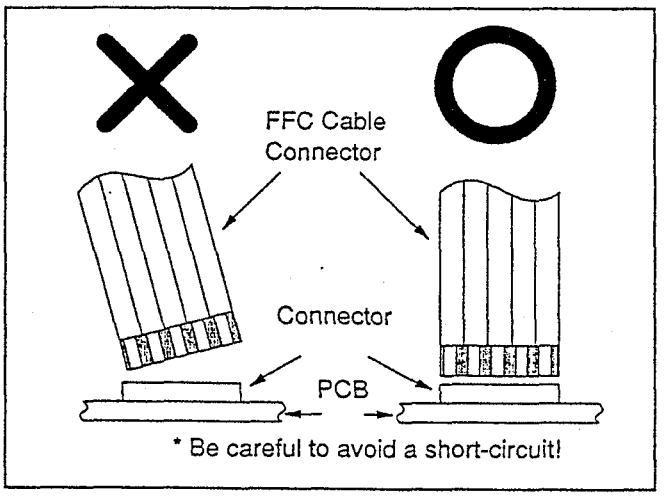

How to Read the Values of the Rectangular Type Chip Components

EXAMPLE:

(a) Resistor

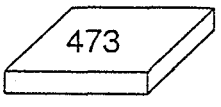

= 473 = 47 [kΩ] (Top View)

(b) Capacitor

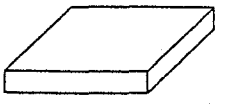

= Not Shown (Top View)

CAUTION:

Once chip parts (Resistors, Capacitors, Transistors, etc.) are removed, they must not be reused. Always use a new part.

Replacement Procedures for Leadless (Chip) Components

The following procedures are recommended for the replacement of the leadless components used in this unit.

1. Preparation for replacement

a. Soldering iron
Use a pencil-type soldering iron (less than 30 watts).

b. Solder
Eutectic solder (Tin 63%, Lead 37%) is recommended.

c. Soldering time
Do not apply heat for more than 4 seconds.

d. Preheating
Leadless capacitors must be preheated before installation.
(266°F-302°F, 130°C-150°C, for about two minutes.)

Note:

a. Leadless components must not be reused after removal.
b. Excessive mechanical stress and rubbing of the component electrode must be avoided.

2. Removing the leadless component

Grasp the leadless component body with tweezers and alternately apply heat to both electrodes. When the solder on both electrodes has melted, remove the leadless component with a twisting motion.

Note:

a. Do not attempt to lift the component off the board until the component is completely disconnected from the board by the twisting action.
b. Be careful not to break the copper foil on the printed circuit board.

3. Installing the leadless component

a. Presolder the contact points of the circuit board.
b. Press the part downward with tweezers and solder both electrodes as shown below.

Note: Do not glue the replacement leadless component to the circuit board.

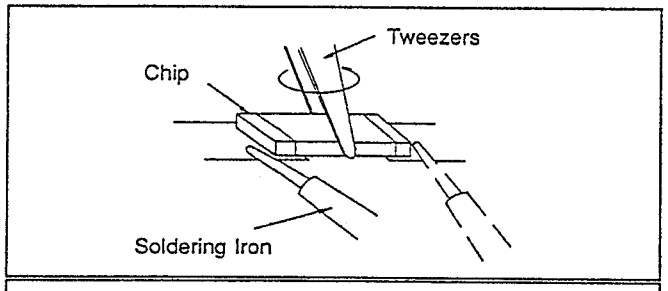

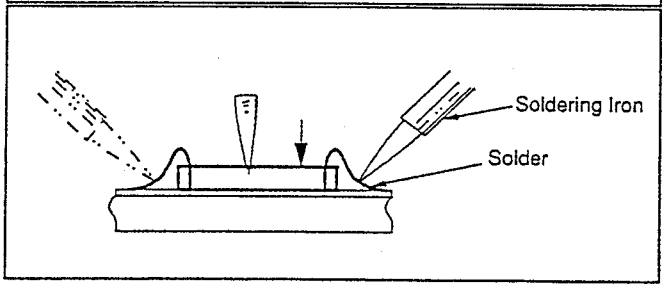

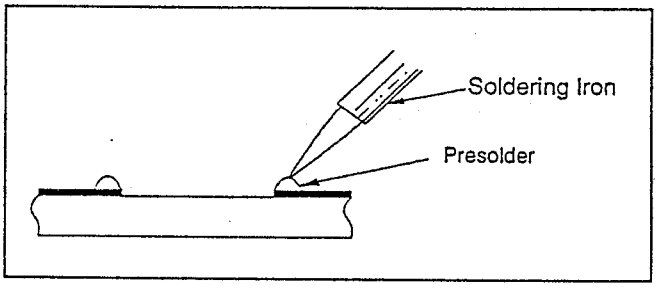

How to Remove/Install Flat Pack IC

1. Removal

With Hot-Air Flat Pack-IC Desoldering Machine:

(1)Prepare the hot-air flat pack-IC desoldering machine, then apply hot air to the flat pack-IC (about 5 to 6 seconds). (Fig. S-1-1)

(2)Remove the flat pack-IC with tweezers while applying the hot air.

Caution:

1. Do not supply the hot air to the chip parts around the flat pack-IC for over 6 seconds because damage to the chip parts may occur. Put masking tape around the flat pack-IC to protect other parts from damage. (Fig. S-1-2)
2. The flat pack-IC on the PCB is affixed with glue, so be careful not to break and don't let damage the foil of each pin and don't let solder land under the IC when removing it.

With Soldering Iron:

(1)Using desoldering braid, remove the solder from all pins of the flat pack-IC. When you use solder flux which is applied to all pins of the flat pack-IC, you can remove it easily. (Fig. S-1-3)

(2)Lift each lead of the flat pack-IC upward one by one, using a sharp pin or wire to which solder will not adhere (iron wire). When heating the pins, use a fine tip soldering iron or a hot air desoldering machine. (Fig. S-1-4)

With Iron Wire:

(1)Using desoldering braid, remove the solder from all pins of the flat pack-IC. When you use solder flux which is applied to all pins of the flat pack-IC, you can remove it easily. (Fig. S-1-3)

(2)Affix the wire to a workbench or solid mounting point, as shown in Fig. S-1-5.

(3)While heating the pins using a fine tip soldering iron or hot air blower, pull up on the wire as the solder melts so as to lift the IC leads from the PCB contact pads.

Note:

When using a soldering iron, care must be taken to ensure that the flat pack-IC is not being held by glue or, when it is removed from the PCB, it may be damaged if excessive force is applied.

2. Installation

(1)Using desoldering braid, remove the solder from the foil of each pin of the flat pack-IC on the PCB, so you can install a replacement flat pack-IC more easily.

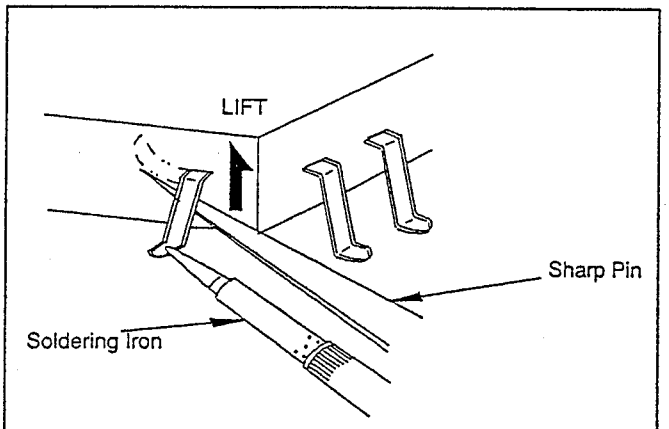

Fig. S-1-4

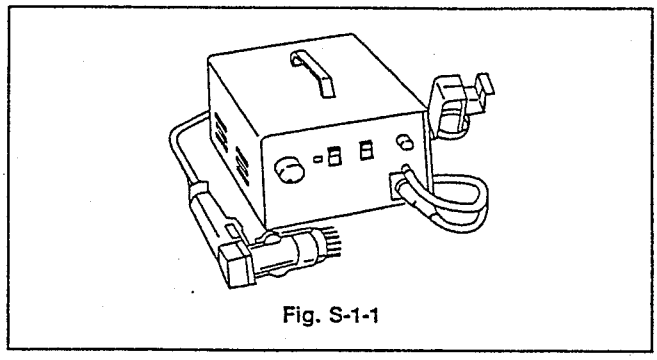

Fig. S-1-1

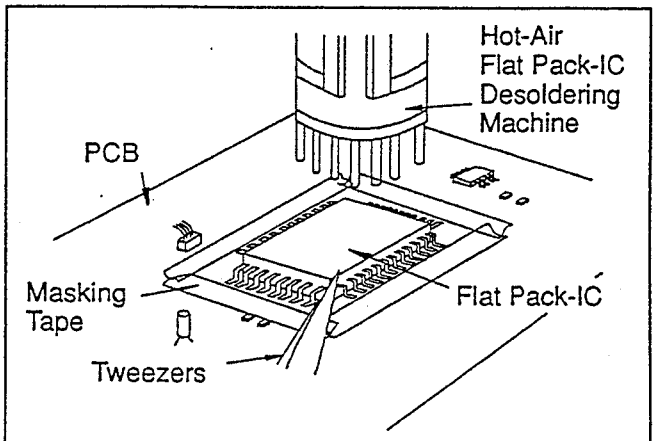

Fig. S-1-2

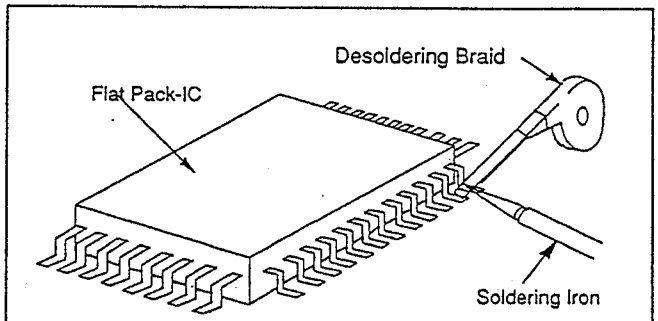

Fig. S-1-3

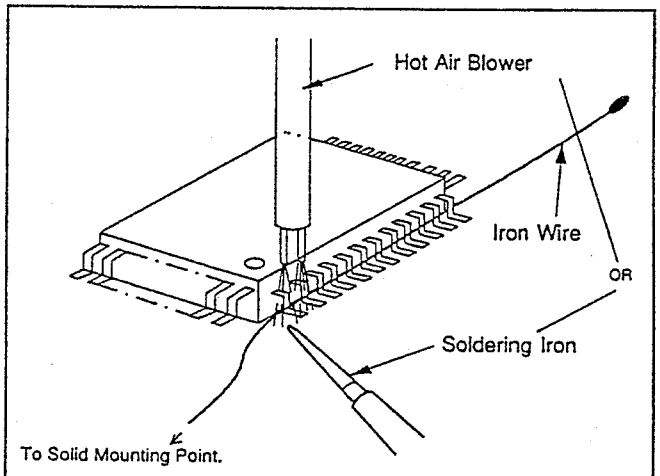

Fig. S-1-5

(2)The "●" mark on the flat pack-IC indicates pin 1. (See Fig. S-1-6) Be sure this mark matches the 1 on the PCB when positioning for installation. Then pre - solder the four corners of the flat pack-IC (See Fig. S-1-7).

(3)Solder all pins of the flat pack-IC. Make sure that none of the pins have solder bridges.

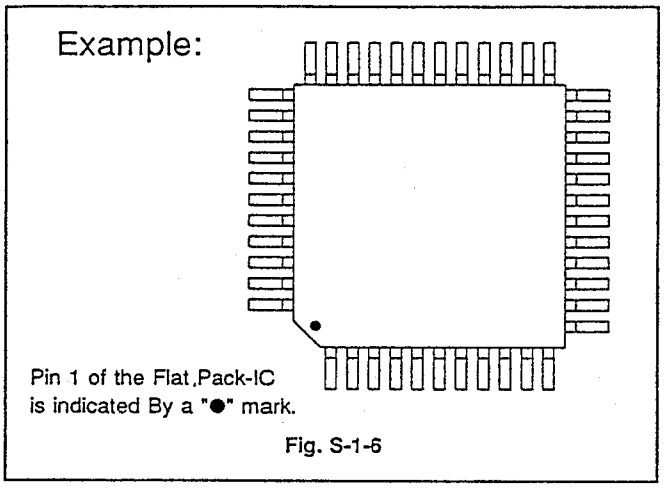

Fig. S-1-6

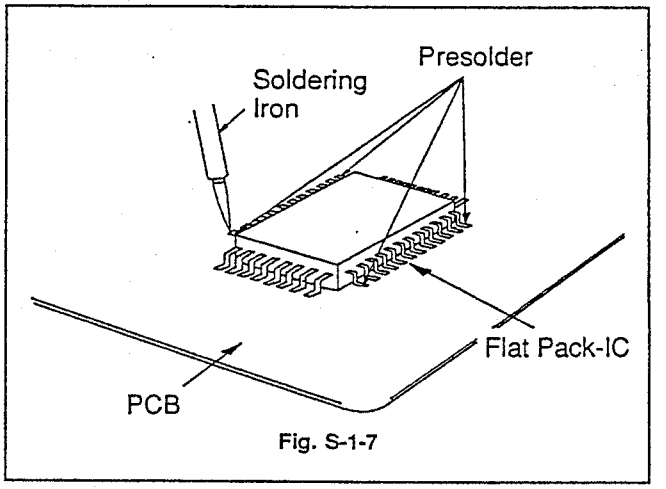

Fig. S-1-7

Instructions for Handling Semiconductors

Electrostatic breakdown of the semiconductors may occur due to a potential difference caused by electrostatic charge during unpacking or repair work.

Ground for Human Body

Be sure to wear a grounding band (1M ohm) that is properly grounded to remove any static electricity that may be charged on the body.

Ground for Workbench

Be sure to place a conductive sheet or copper plate with proper grounding (1M ohm) on the workbench or other surface, where the semiconductors are to be placed. Because the static electricity charge on clothing will not escape through the body grounding band, be careful to avoid contacting semiconductors to your clothing.

INCORRECT

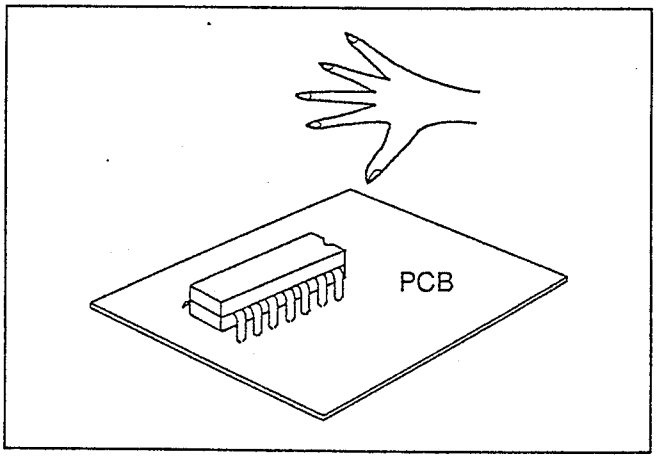

CORRECT

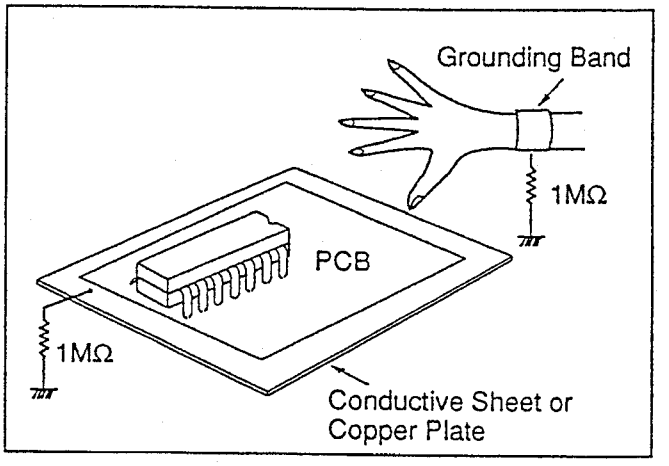

PREPARATION FOR SERVICING

NOTE:

This chassis have optical tape sensor system.

When the cabinet is removed, unit way move unexpectedly.
To avoid this, follow the steps below.

PREPARATION:

1] When not insert the tape, to press Tracking Up and Down buttons together 10 seconds.
After this operation, Tape Start and End Sensor become inactive.
And cassette indicator on the display brinks.

CAUTION:

In this mode, Tape Start and End Sensor are inactive, so do not run the Start and End of Tape.
2] To exit from this mode, disconnect the AC plug.

— FRONT VIEW —

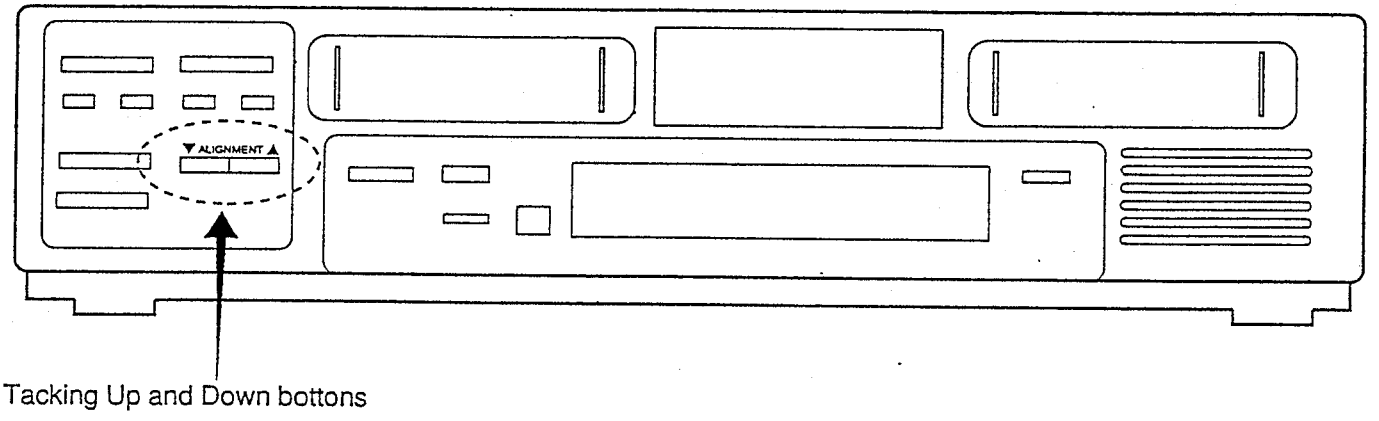

— DIGITAL DISPLAY —

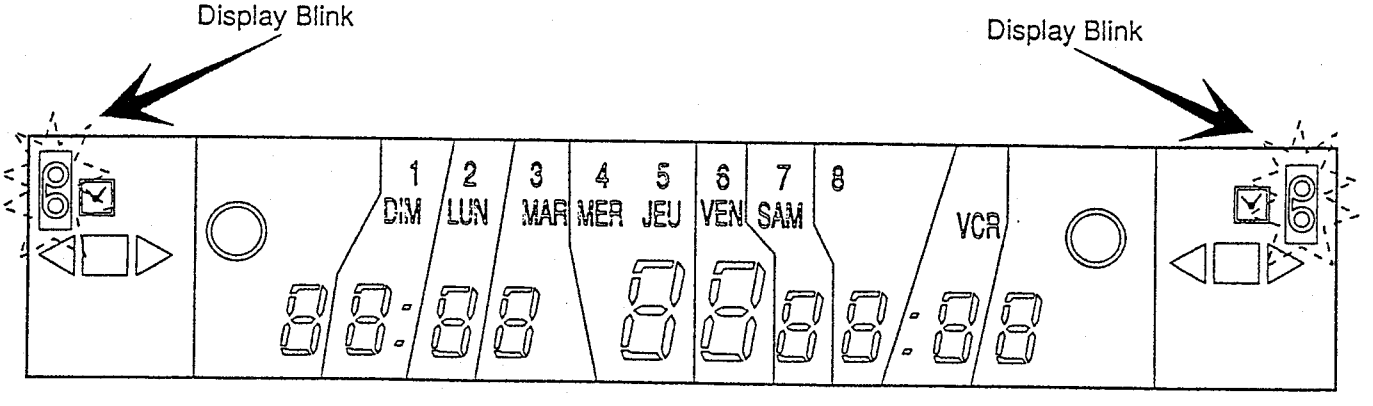

DISASSEMBLY INSTRUCTIONS (CABINET)

1. Disassembly Flow Chart

This flow chart indicates the disassembly steps of the cabinet parts, VCR Unit and the P.C.Boards in order to gain access to item(s) to be serviced. When reassembling, perform the steps(s) in the reverse order. Bend, route and dress the cables as they were originally.

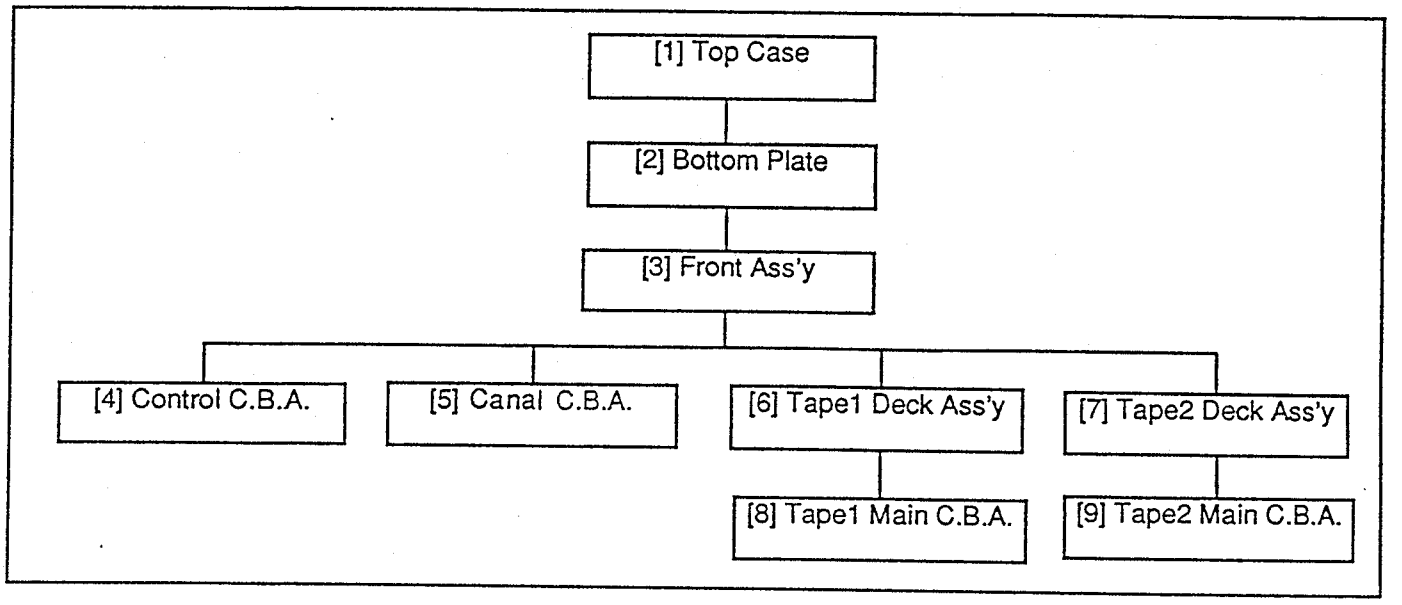

2. Disassembly Method

STEP/ LOC. No.	PART	REMOVAL		
		Fig.No.	REMOVE/*UNLOCK/RELEASE/UNPLUG/UNCLAMP/ DESOLDER	Note
[1]	Top Case	Fig. 1	5(S-1)	1
[2]	Bottom Plate	Fig. 2	7(S-2), 2(L-1)	2
[3]	Front Ass'y	Fig. 3	2(S-3), 9(L-2)	3
[4]	Control C.B.A.	Fig. 4	5(L-3), *(CN5001, CN5002, CN5003, CN5004)	4
[5]	Canal C.B.A.	Fig. 5	2(S-4), *(CN1, CN2, CN3, CN4)	5
[6]	Tape1 Deck Ass'y	Fig. 5	3(S-5), 2(S-6), 3(S-7), Support Angle, *(CN3201, CN4001)	6
[7]	Tape2 Deck Ass'y	Fig. 5	(S-8), 3(S-9), *(CN3301, CN4101)	7
[8]	Tape1 Main C.B.A.	Fig. 6	(S-10), *4(L-4)	8
[9]	Tape2 Main C.B.A.	Fig. 6	(S-11), *3(L-5)	9
①	②	③	④	⑤

①:Order of steps in Procedure
When reassembling, perform the step(s) in the reverse order.
These numbers are also used as the identification(location) No. of parts in Figures.
②:Part to be removed or installed.
③:Fig. No. showing Procedure of Part Location.
④:Identification of part to be removed, unlocked, released.
S=Screw L=Locking Tab CN=Connector *=Unlock
⑤:Installing Information.

Reference <Note> in Table

1. Top Case Removal. (Fig. 1)
   1) Remove 5 Screws (S-1).

2. Bottom Plate Removal. (Fig. 2)
   1) Remove 7 Screws (S-2).
   2) Slide the Bottom Plate in the direction of the arrow mark while pushing 2 Locking Tabs (L-1).

3. Front Ass'y Removal. (Fig. 3)
   1) Remove 2 Screws (S-3)
   2) Release 9 Locking Tabs (L-2).

4. Control C.B.A. Removal. (Fig. 4)
   1) Release 5 Locking Tabs (L-3).
   2) Disconnect the Connectors (CN5001, CN5002, CN5003, CN5004).

5. Canal C.B.A. (Fig. 5)
   1) Disconnect the Connectors (CN1, CN2, CN3, CN4).
   2) Remove 2 Screws (S-4).

6. Tape1 Deck Ass'y Removal. (Fig. 5)
   1) Remove 3 Screws (S-5), remove the Support Angle.
   2) Remove 2 Screws (S-6) and 3 Screws (S-7).
   3) Disconnect the Connectors (CN3201, CN4001), then lift up the Tape1 Deck Ass'y.

7. Tape2 Deck Ass'y Removal. (Fig. 5)
   1) If not already removed, remove the Support Angle.
   2) Remove Screw (S-8) and 3 Screws (S-9).
   3) Discnnect the Connectors (CN3301, CN4101), then lift up the Tape2 Deck Ass'y.

8. Tape1 Main C.B.A. Removal. (Fig. 6)
   1) Remove Screw (S-10).
   2) Then clear the 4 Locking Tabs (L-4) by lifting it up from the chassis frame.

9. Tape2 Main C.B.A. Removal. (Fig. 6)
   1) Remove Screw (S-11).
   2) Then clear the 3 Locking Tabs (L-5) by lifting it up from the chassis frame.

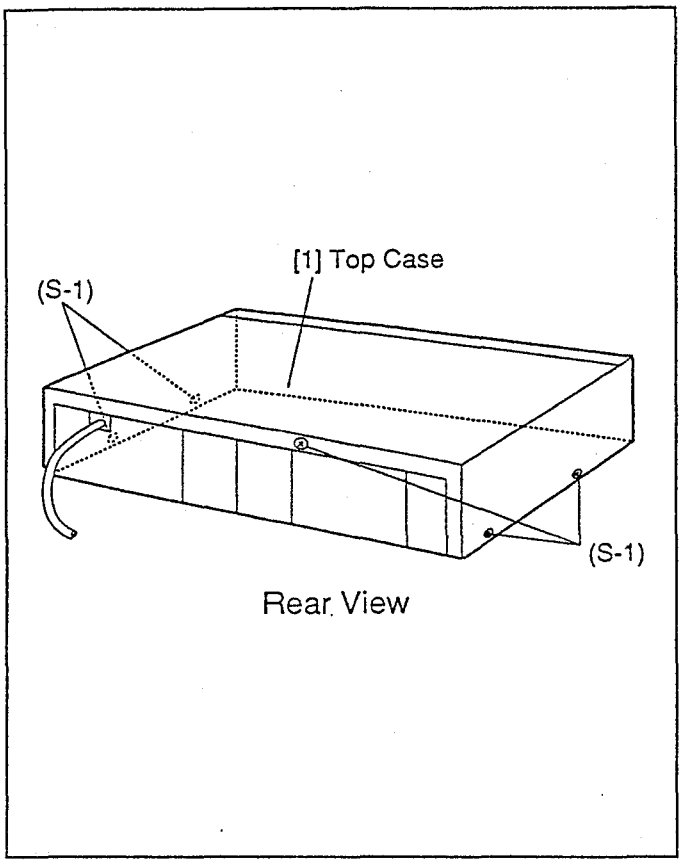

Fig. 1

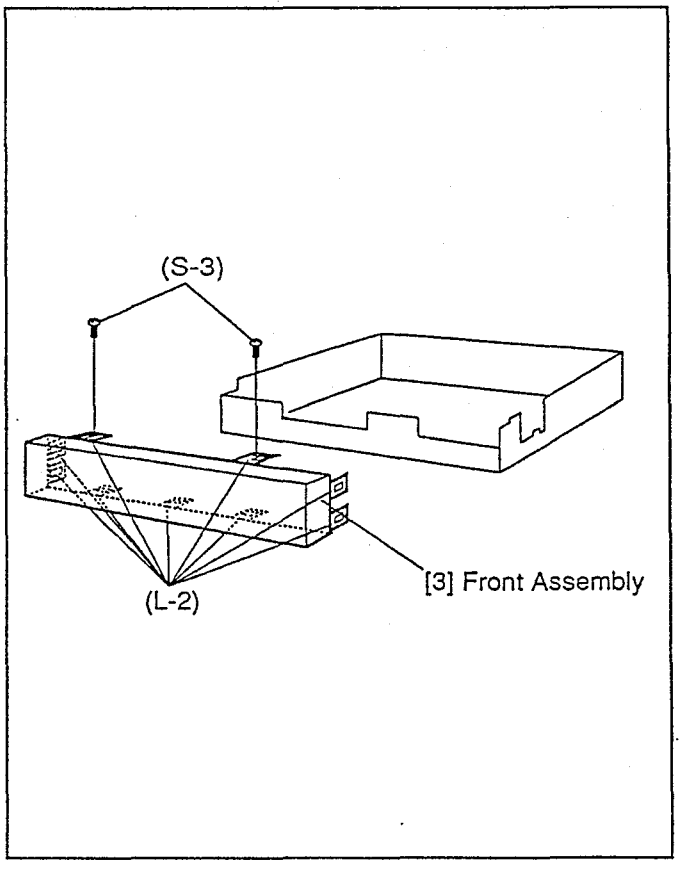

Fig. 3

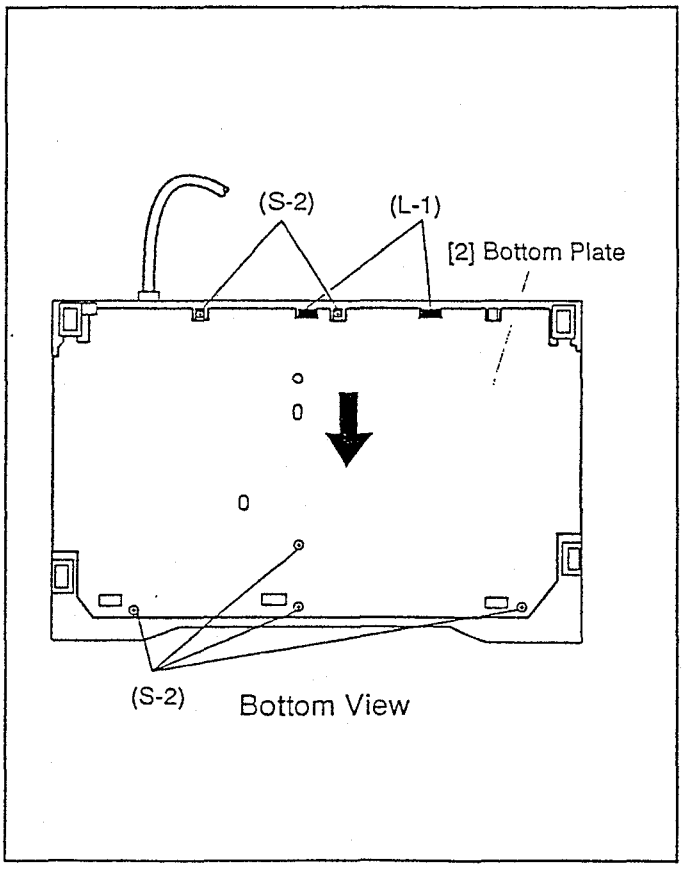

Fig. 2

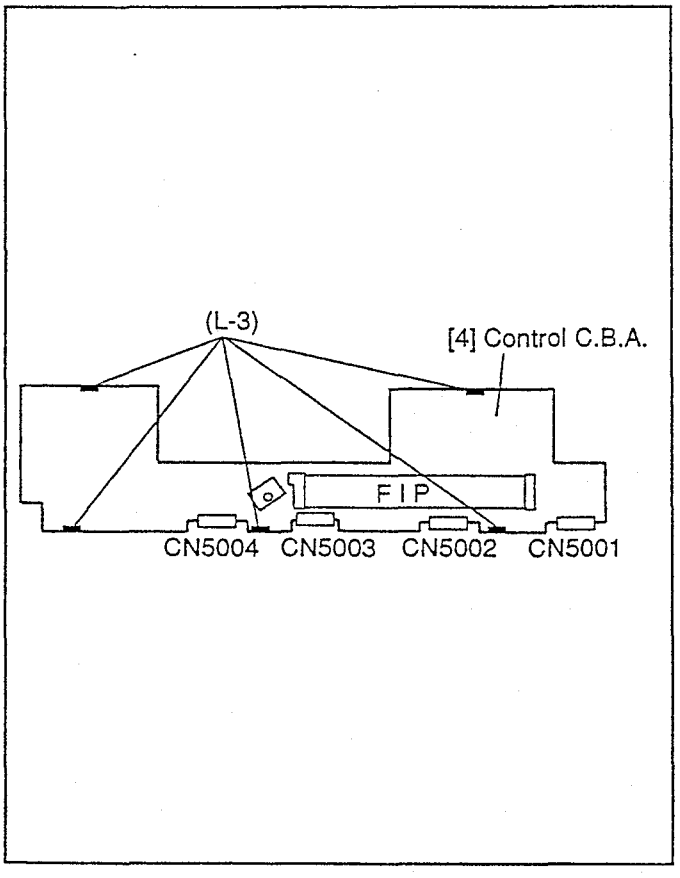

Fig. 4

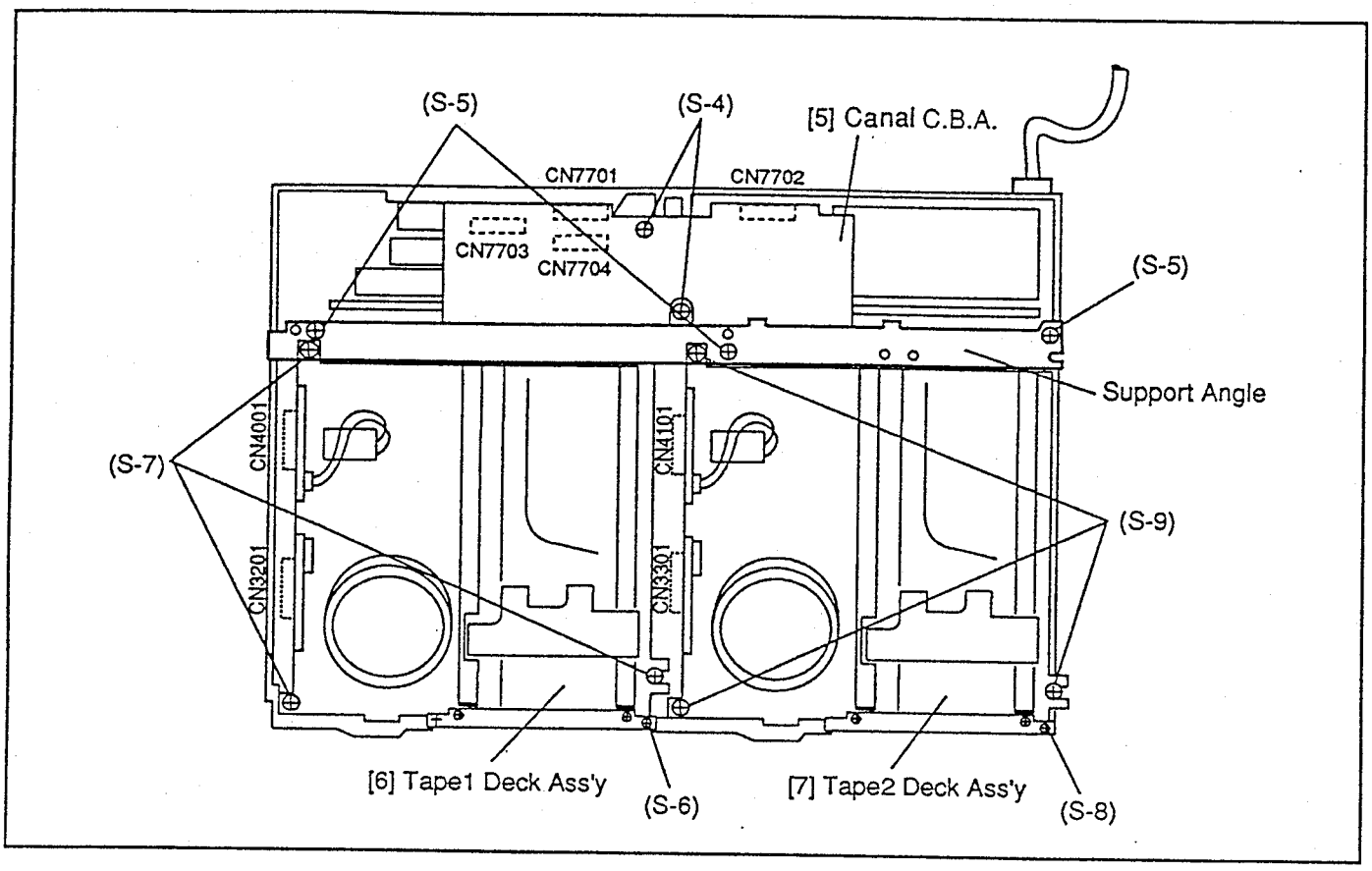
(S-5)
(S-4)
[5] Canal C.B.A.
CN7701
CN7702
CN7703
CN7704
(S-5)
Support Angle
(S-7)
CN4001
CN4101
CN3201
CN3301
(S-9)
[6] Tape1 Deck Ass'y
(S-6)
[7] Tape2 Deck Ass'y
(S-8)

Fig. 5

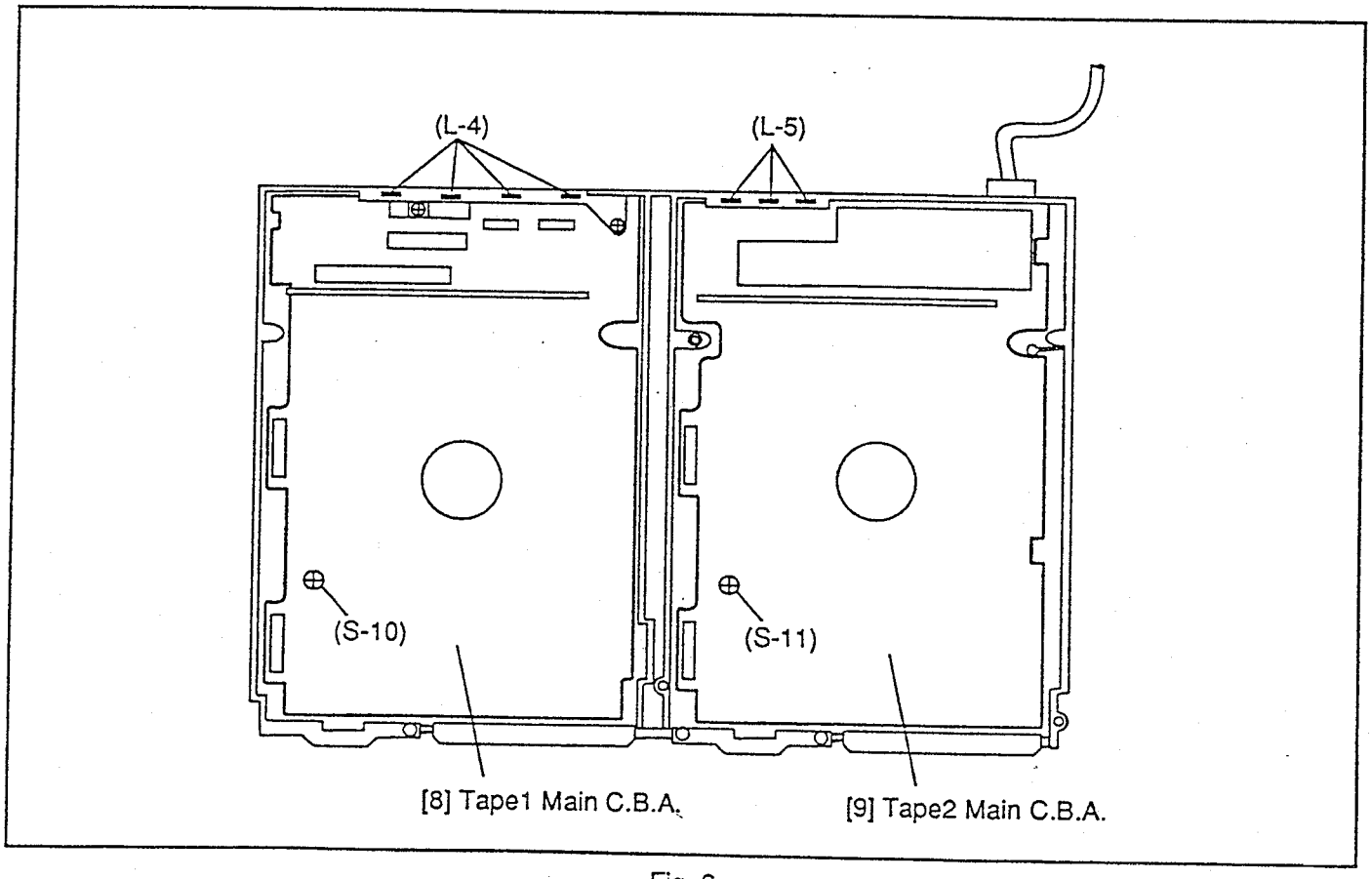
(L-4)
(L-5)
(S-10)
(S-11)
[8] Tape1 Main C.B.A.
[9] Tape2 Main C.B.A.

Fig. 6

A-IN/OUT SELECTOR BLOCK DIAGRAM

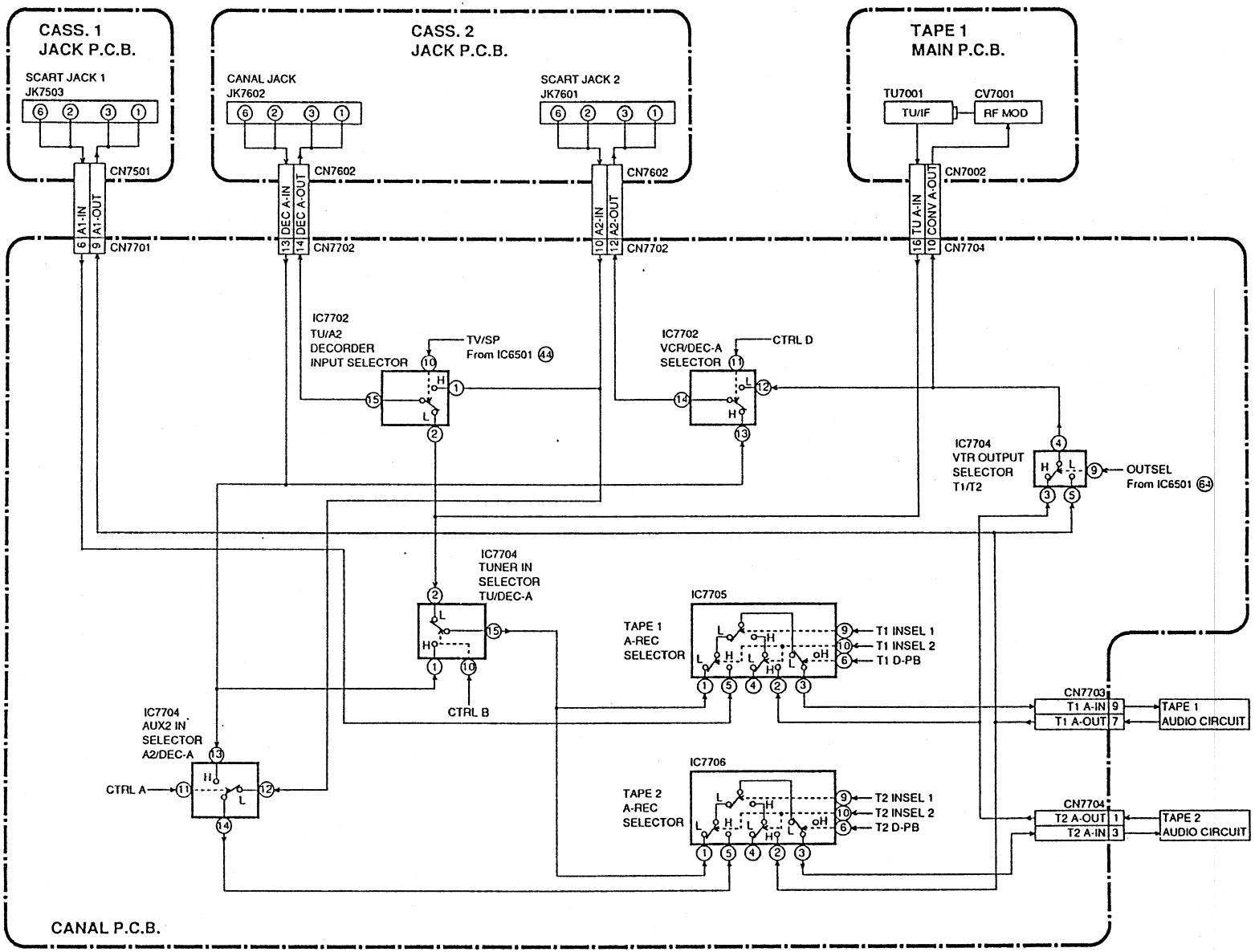

CTRL A	CH⁺-H	TV/SP
H	H	H
L	EXCEPT THE ABOVE QUALIFICATION	

CTRL B	CH⁺-H	TV/SP
H	H	L
L	EXCEPT THE ABOVE QUALIFICATION	

CTRL D	CH⁺-H	T1 D-PB	T2 D-PB	TV/SP
H	H	L	L	H
L	EXCEPT THE ABOVE QUALIFICATION			

AUX-CTRL	T2 D-PB	T1 D-PB	TV/SP	CH⁺-H
L	L	L	L	L
L	L	L	H	L
L	L	L	L	H
H	EXCEPT THE ABOVE QUALIFICATION			

TV/SP→TV : "H", VCR : "L"

VIDEO/AUDIO/HEAD AMP (TAPE 1) BLOCK DIAGRAM (1)

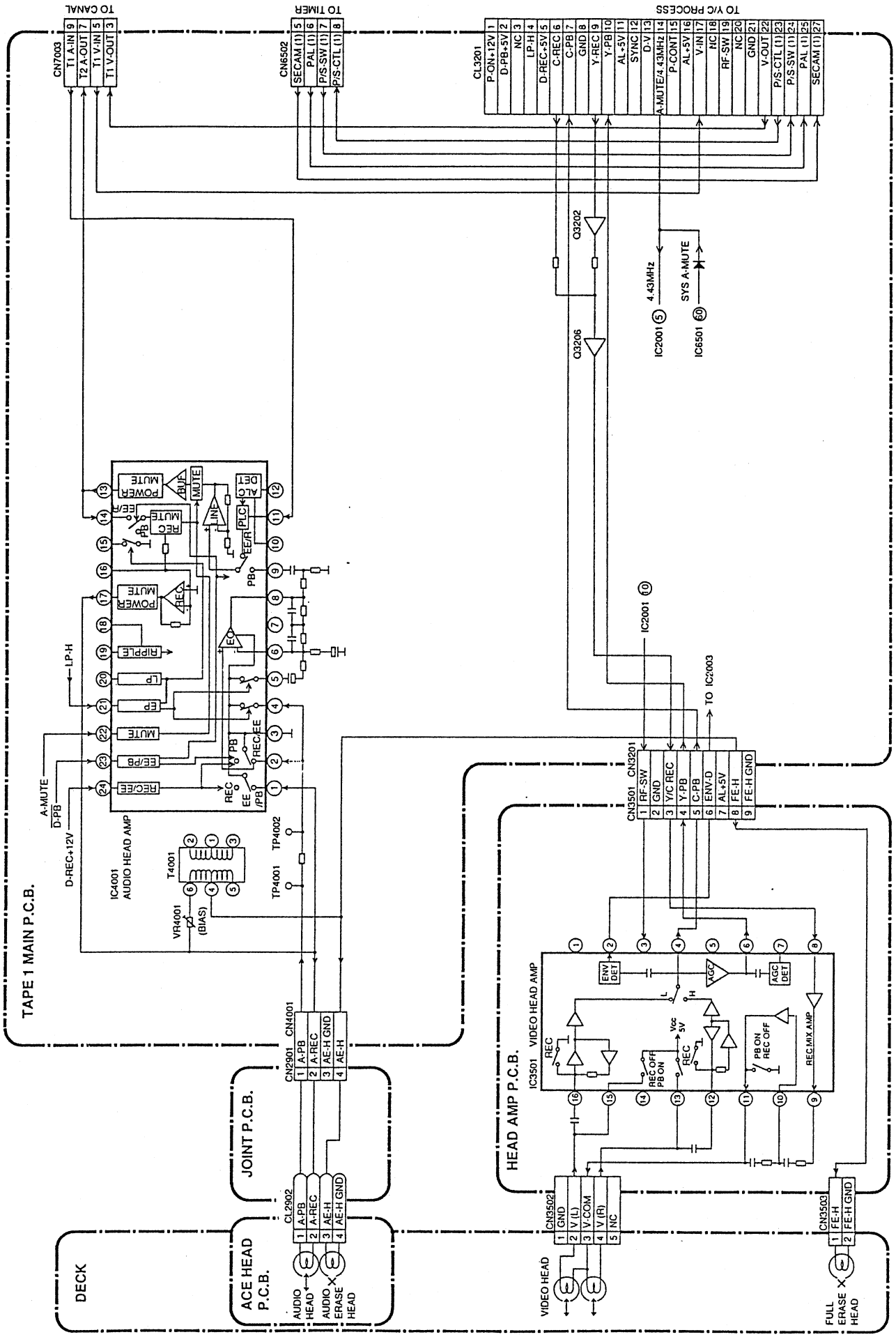

BLOCK DIAGRAMS

OVER ALL BLOCK DIAGRAM

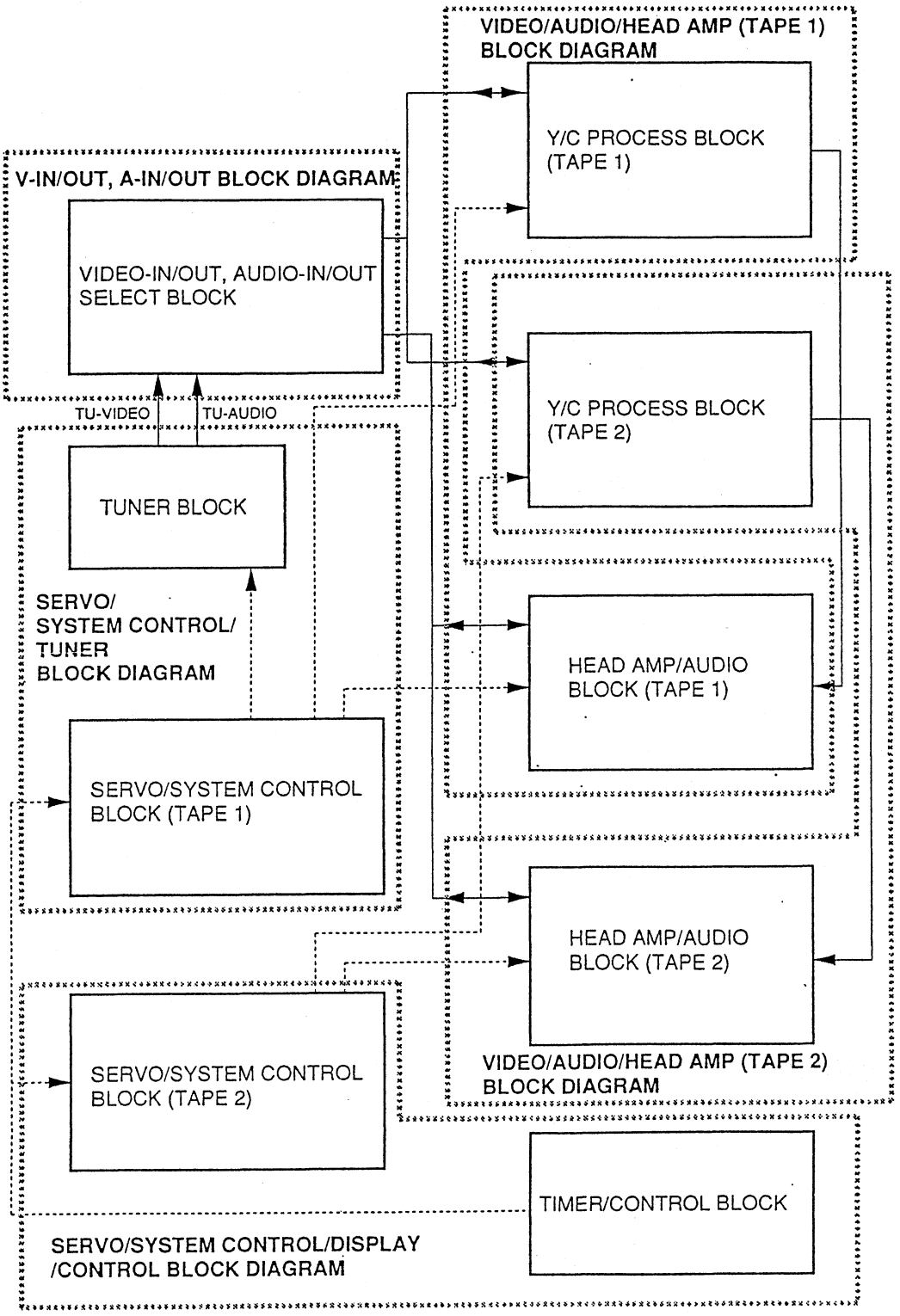

V-IN/OUT SELECTOR BLOCK DIAGRAM

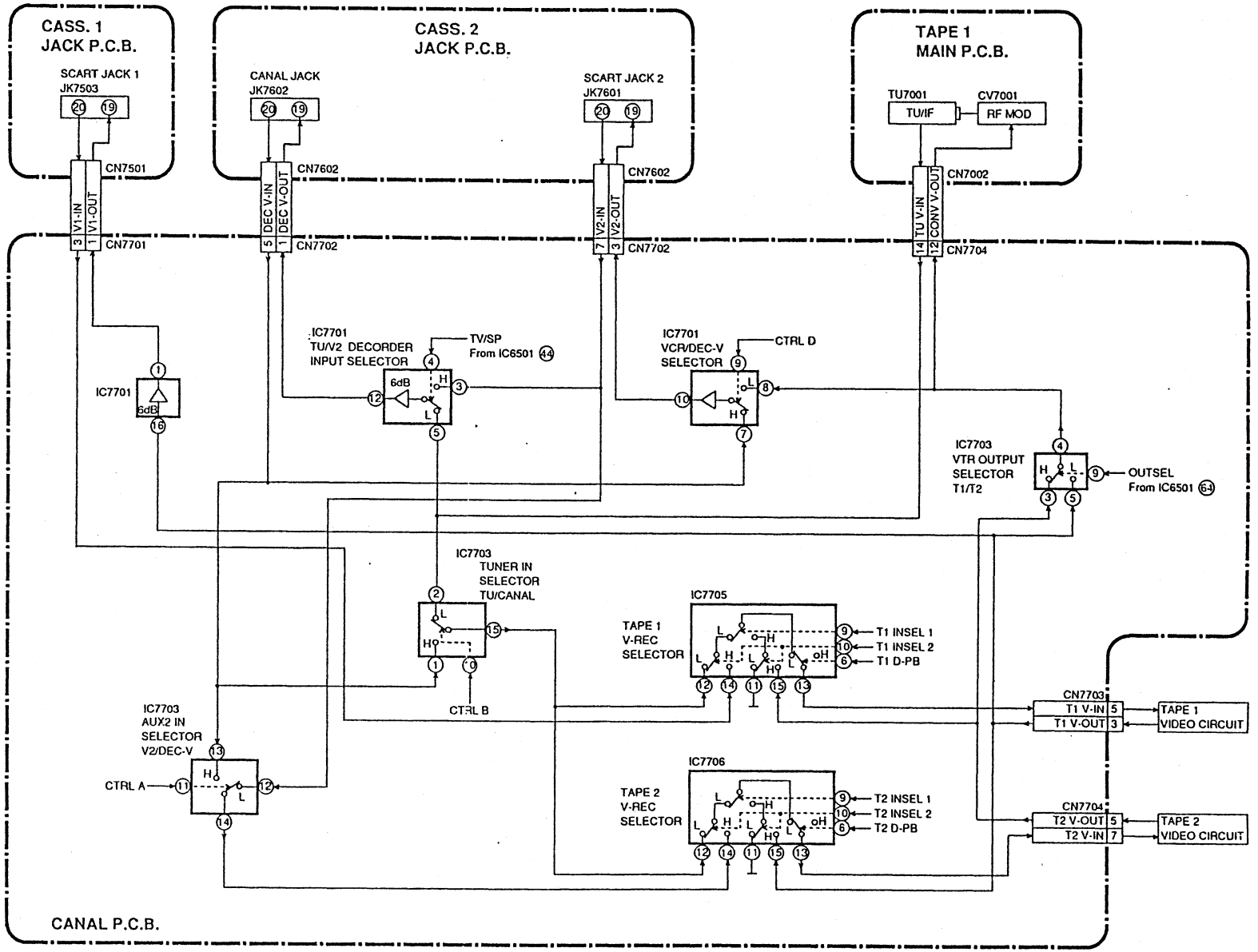

CTRL A	CH⁺-H	TV/SP
H	H	H
L	EXCEPT THE ABOVE QUALIFICATION	

CTRL B	CH⁺-H	TV/SP
H	H	L
L	EXCEPT THE ABOVE QUALIFICATION	

CTRL D	CH⁺-H	T1 D-PB	T2 D-PB	TV/SP
H	H	L	L	H
L	EXCEPT THE ABOVE QUALIFICATION			

AUX-CTRL	T2 D-PB	T1 D-PB	TV/SP	CH⁺-H
L	L	L	L	L
L	L	L	H	L
L	L	L	L	H
H	EXCEPT THE ABOVE QUALIFICATION			

TV/SP→TV : " H ", VCR : " L "

VIDEO/AUDIO/HEAD AMP (TAPE 2) BLOCK DIAGRAM (2)

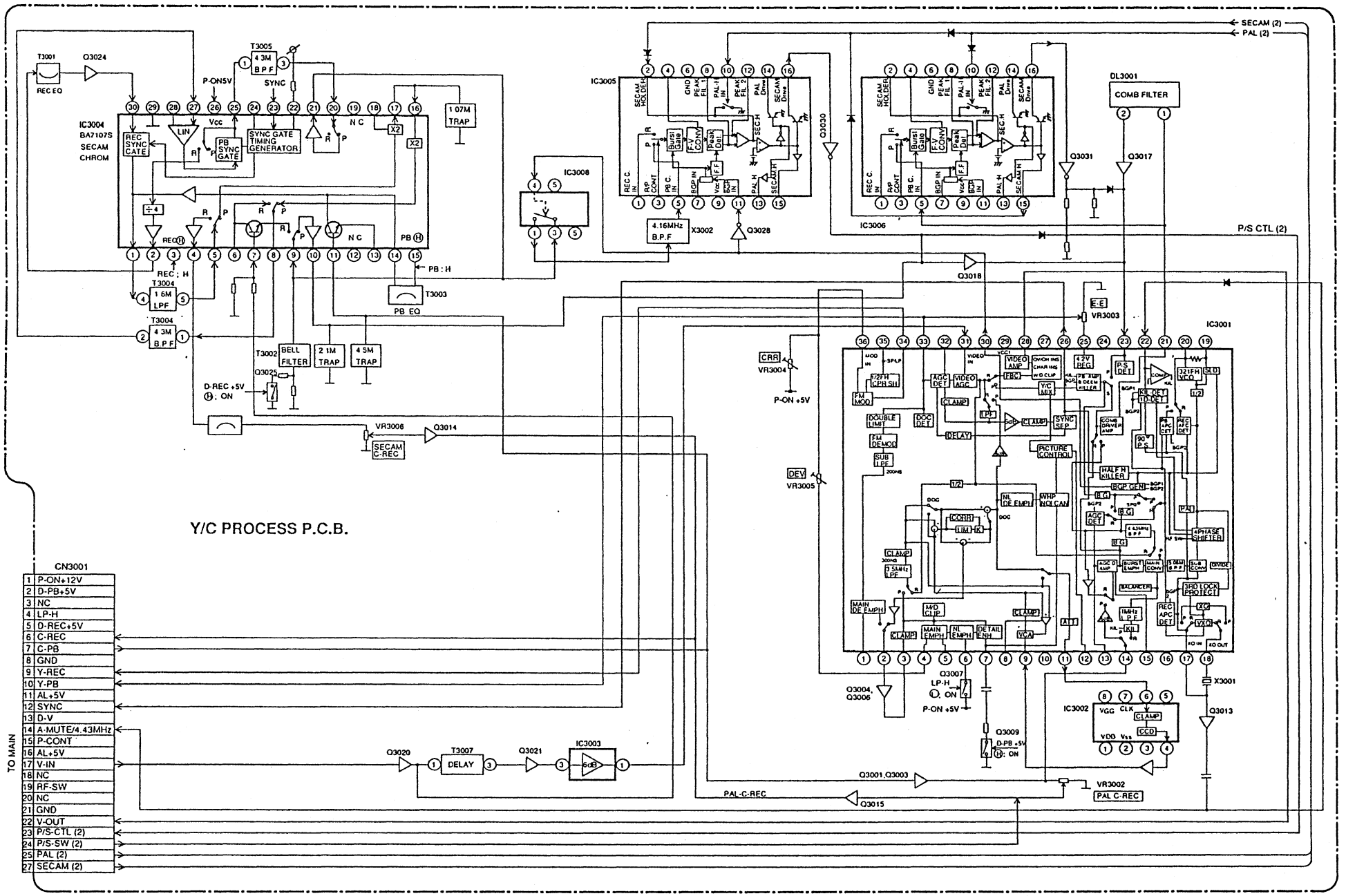

SERVO/SYSTEM CONTROL/TUNER (TAPE 1) BLOCK DIAGRAM

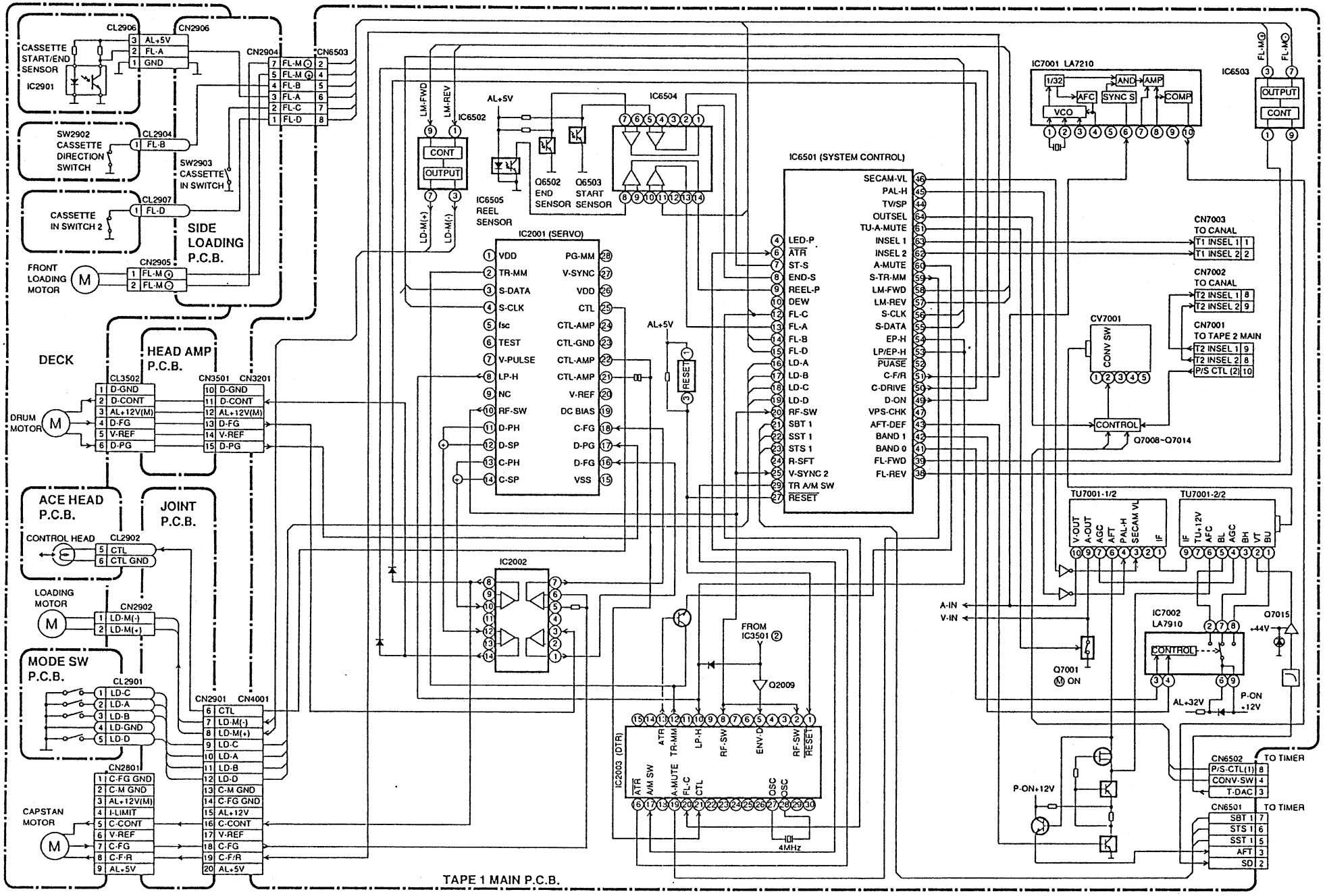

VIDEO/AUDIO/HEAD AMP (TAPE 1) BLOCK DIAGRAM (2)

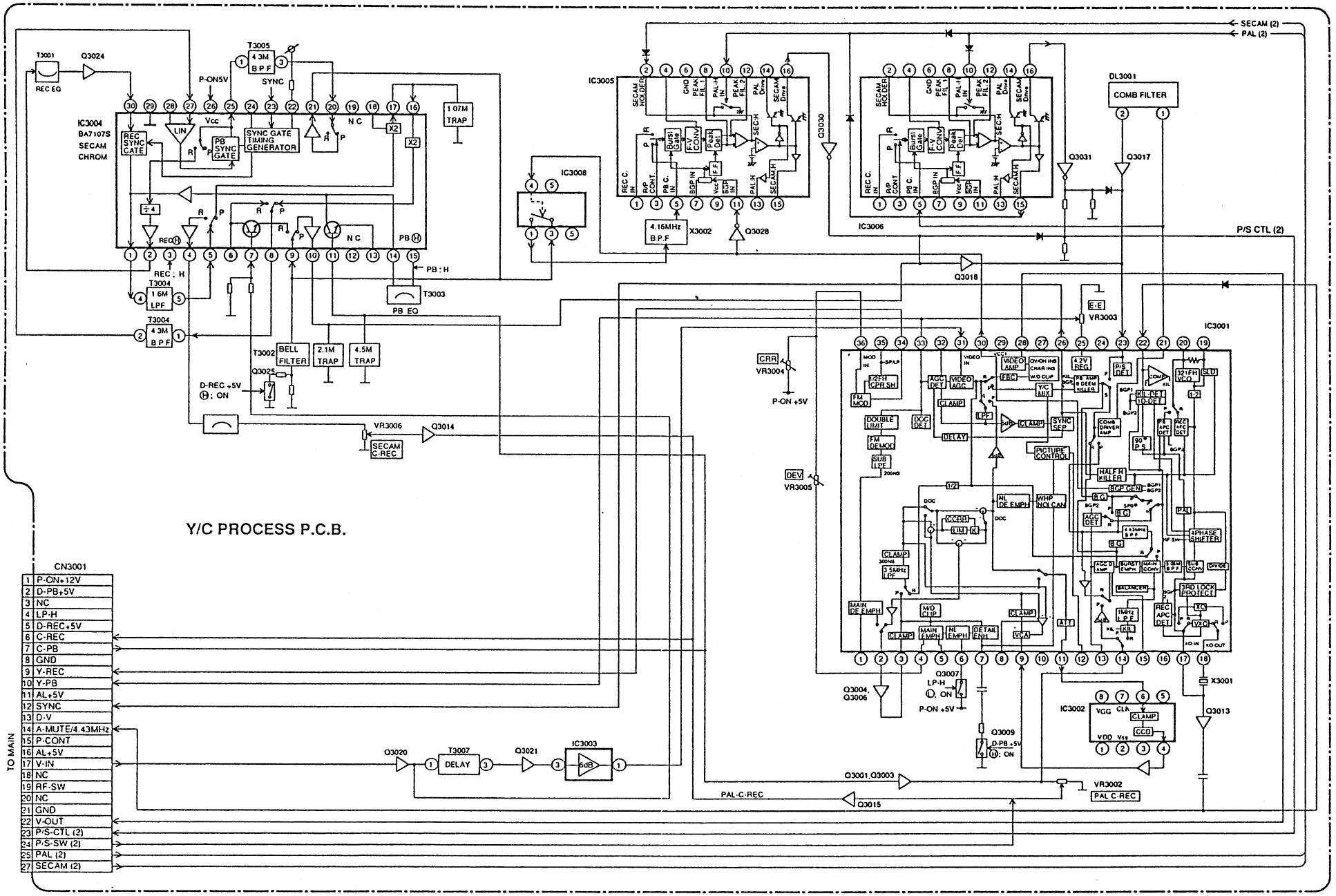

VIDEO/AUDIO/HEAD AMP (TAPE 2) BLOCK DIAGRAM (1)

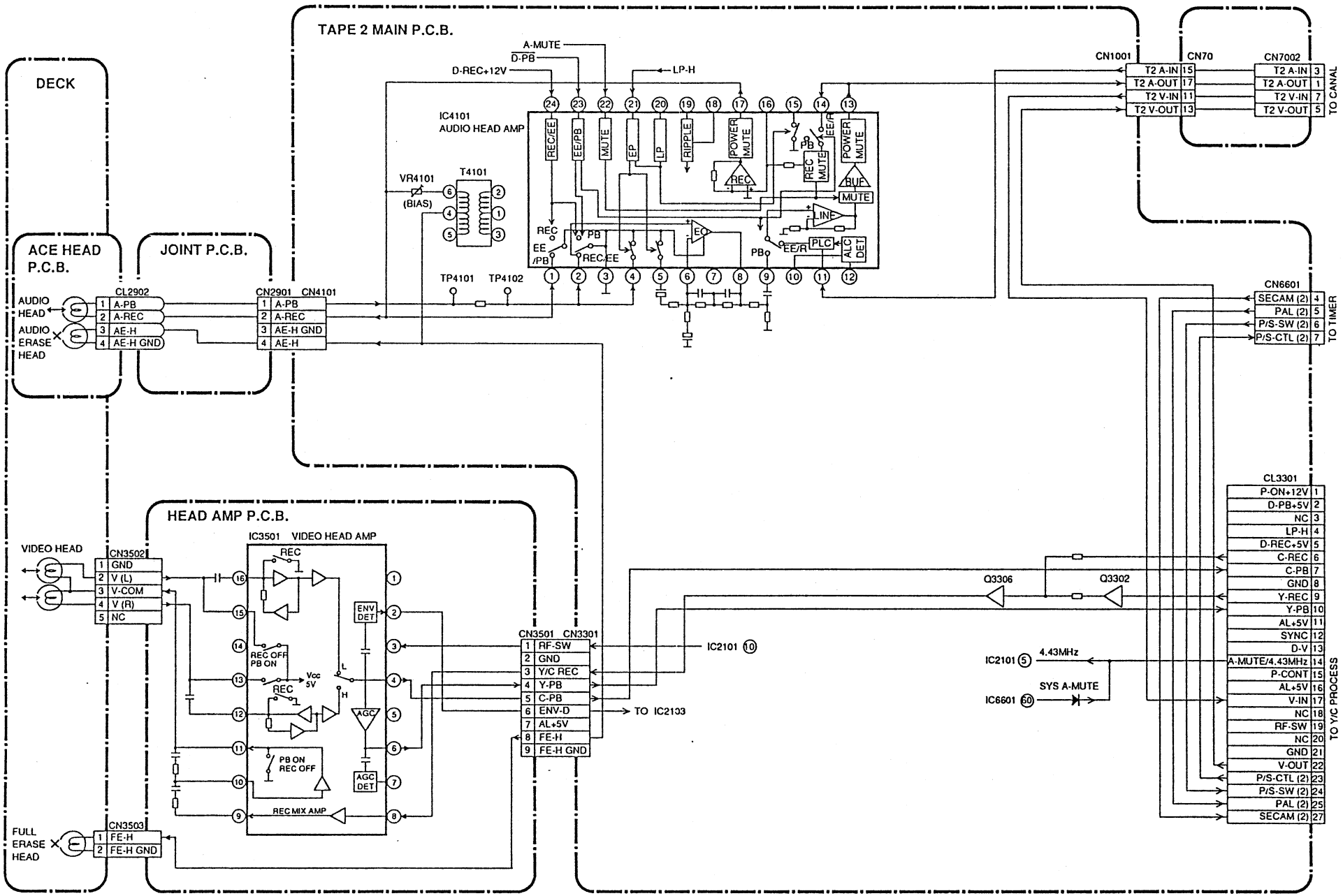

SERVO/SYSTEM CONTROL/DISPLAY/CONTROL (TAPE 2) BLOCK DIAGRAM

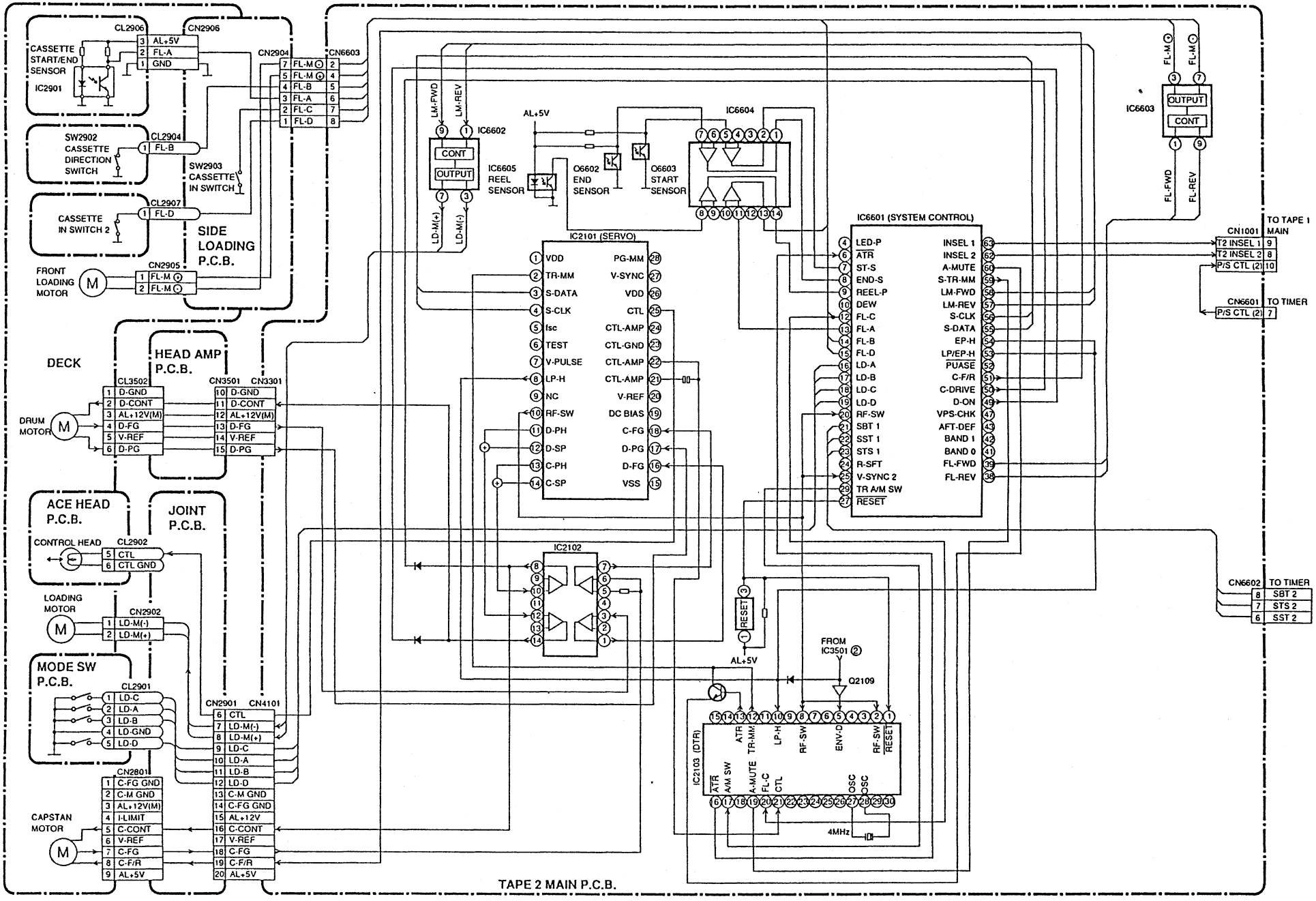

TIMER BLOCK DIAGRAM

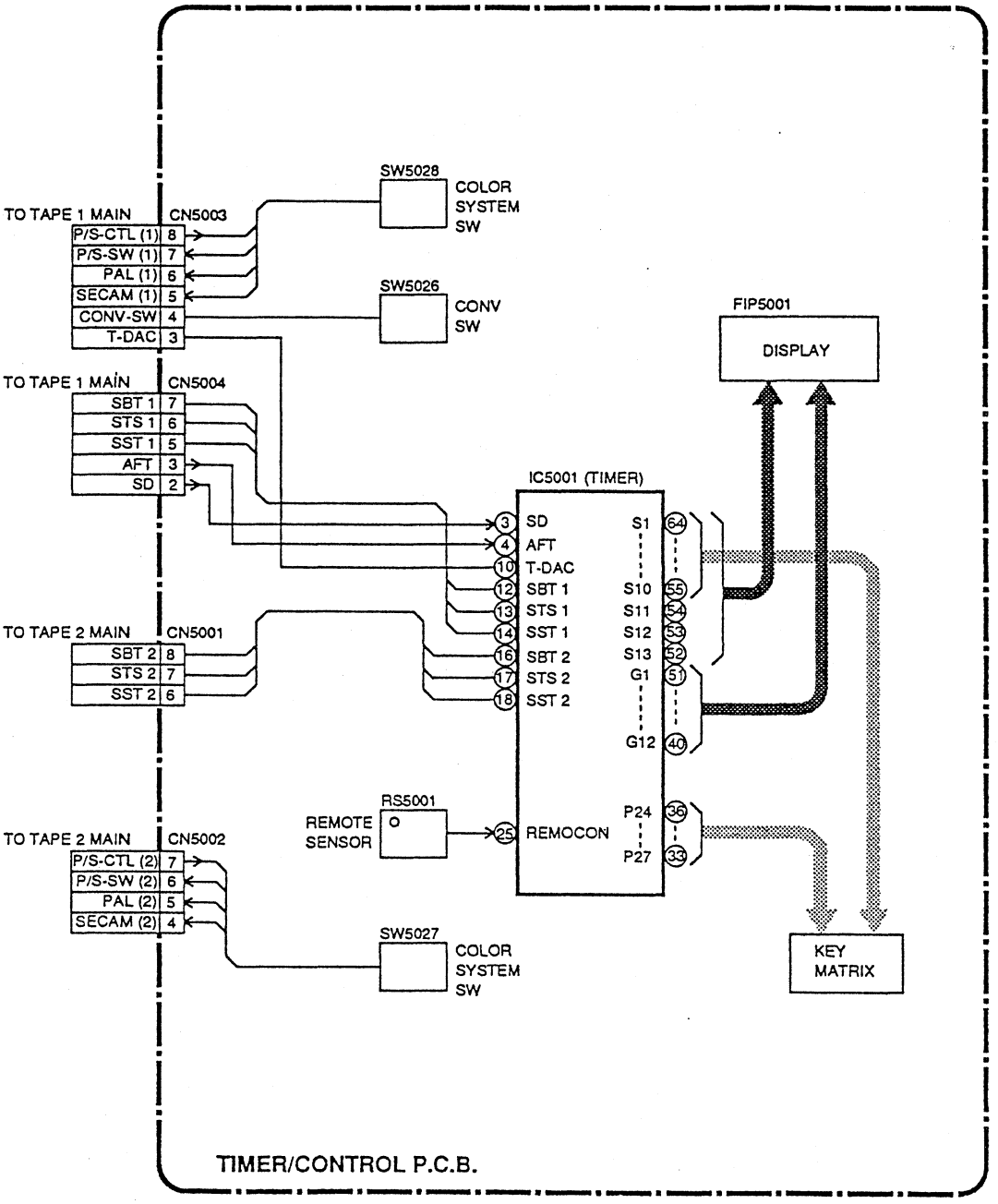

ELECTRICAL ADJUSTMENT INSTRUCTIONS [TAPE 1]

NOTE:
Electrical adjustment are required after replacing circuit components and certain mechanical parts. It is important to perform these adjustments only after all repairs and replacements have been completed. Also, do not attempt these adjustments unless the proper equipment is available.

TEST EQUIPMENT REQUIRED

1. Oscilloscope: Dual-trace with 10:1 probe.
2. TV Monitor
3. Pattern Generator (Color bar with 100% white)
4. AC Voltmeter (RMS)
5. Test Tape F6-A, F7-A, F7-BELL
6. Spectrum Analyzer, Frequency Counter
7. SECAM Video Analyzer

HEAD SWITCHING POSITION ADJUSTMENT

Test Point	Adj. Point	Mode	Input
J35 (V-OUT) J89 (RF-SW) GND	VR2001 (Switching Point) (TAPE 1 MAIN PCB)	PLAY	---
Tape	M. EQ.	Spec.	
F6-A	Oscilloscope	6.5H(416μs)	

Connections of M. EQ.

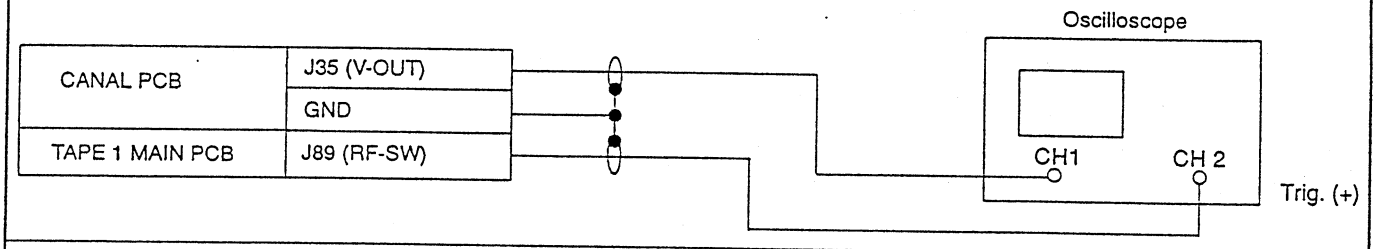

Figure

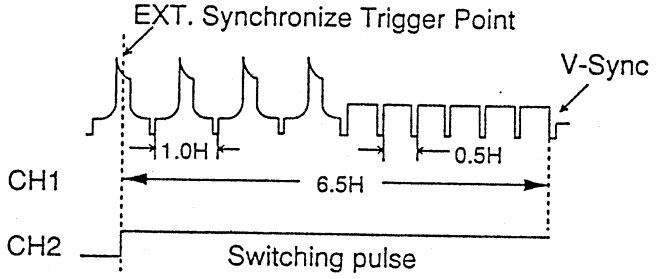

Reference Notes:

1. Connect equipments as shown in the above table.
2. Set the input trigger mode to CH2 and set trigger slope to (+).
3. Adjust the Tracking control to its center position. Press + and – of Tracking control Button at same time.
4. Playback the test tape and adjust VR2001 so that the V-sync front edge of CH1 video output waveform is delayed 6.5H(416μs) from the rising of CH2 Head Switching pulse waveform.

E-E LEVEL ADJUSTMENT

Test Point	Adj. Point	Mode	Input
J35 (V-OUT) GND	VR3003 (E-E) (TAPE 1 Y/C PROCESS PCB)	E-E	Color Bar signal with 100% White
Tape	M. EQ.	Spec.	
----	Pattern Generator TV Monitor Oscilloscope	1.0Vp-p±0.05V	

Connections of M. EQ.

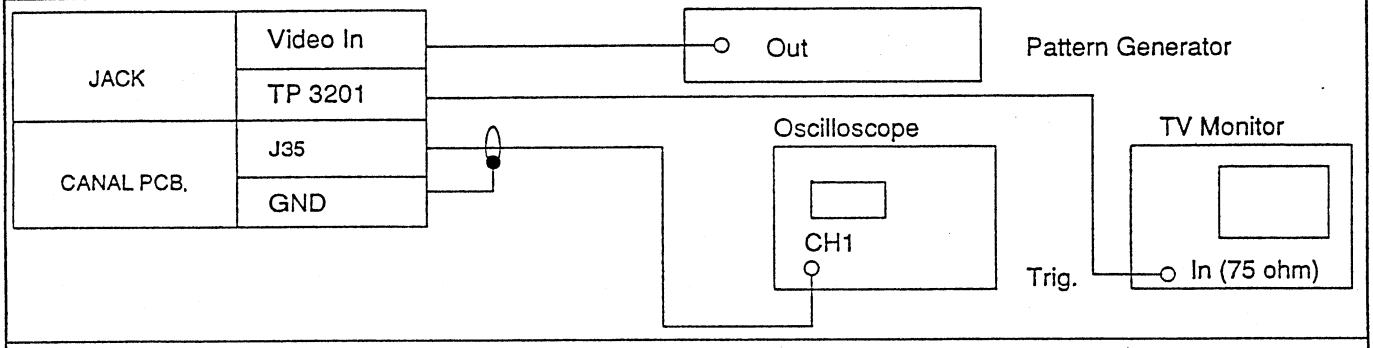

Figure

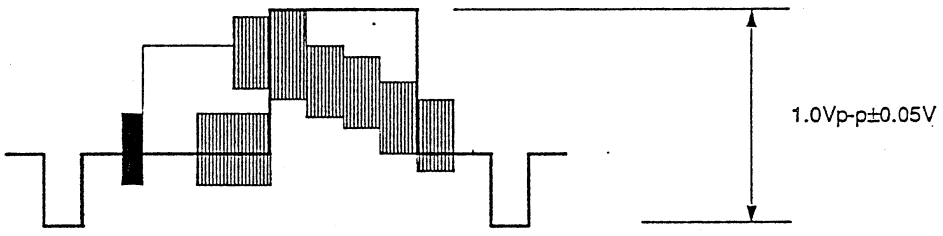

Reference Notes:

1. Connect equipments as shown in the above table.
2. TAPE 1 Color system switch= Auto Mode.
3. Input Color Bar signal with 100% White to Video Input.
4. Adjust VR3003 so that the video level becomes 1.0Vp-p±0.05V.

FM CARRIER DEVIATION ADJUSTMENT

Test Point	Adj. Point	Mode	Input
J105 (Y-REC)	VR3004 (CRR) VR3005 (DEV) (TAPE 1 Y/C PROCESS PCB)	REC (SP)	Blank Tape Color Bar signal with 100% White
Tape	**M. EQ.**	**Spec.**	
Blank Tape	Pattern Generator Spectrum Analyzer Oscilloscope	Sync-tip to 3.8MHz±0.05MHz White-peak to 4.8MHz±0.05MHz	

Connections of M. EQ.

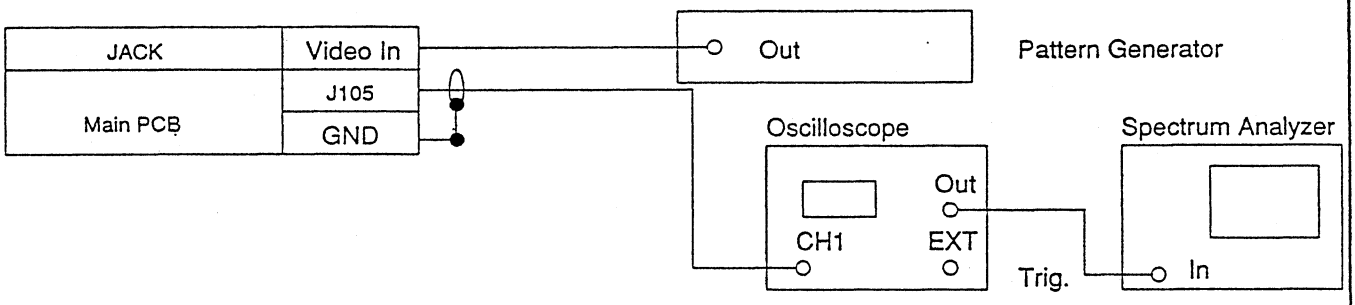

Figure

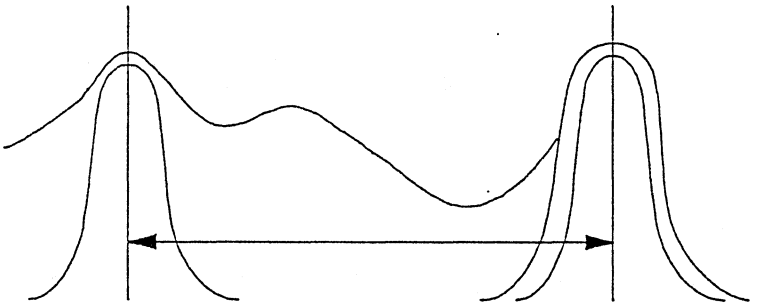

Reference Notes:

1. Connect equipments as shown in the above table.
2. TAPE 1 Color system switch= Auto Mode.
3. Input Color Bar signal with 100% White to Video Input.
4. Adjust Sync-tip to 3.8MHz±0.05MHz by VR3004, White-peak to 4.8MHz±0.05MHz by VR3005.

PAL/SECAM F-V DETECTOR

Test Point	Adj. Point	Mode	Input
IC3006 (8)Pin or (12)Pin (SECAM-L and PAL F-V DETECTOR)	VR3008 (PAL/SECAM REC SELECTOR) (TAPE 1 Y/C PROCESS PCB)	E-E	PAL Color Bar signal with 100% White
Tape	M. EQ.	Spec.	
---	Pattern Generator Oscilloscope	DC 2.45~2.5V	

Connections of M. EQ.

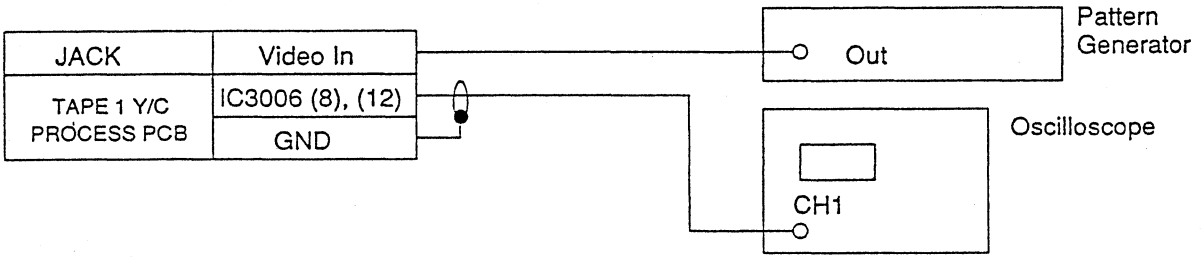

Figure

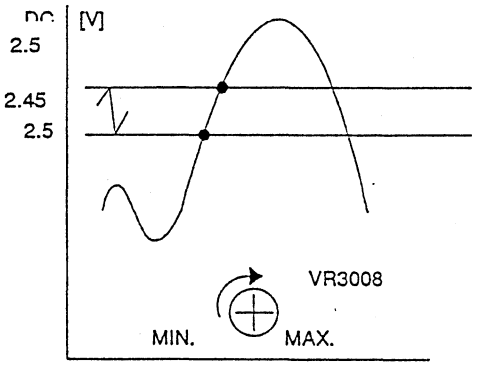

Reference Notes:

1. Connect equipments as shown in the above table.
2. TAPE 1 Color system switch= Auto Mode.
3. Adjust VR3008 so that the DC Voltage level becomes DC 2.45~2.5V.

REC. CURRENT ADJUSTMENT (PAL CHROMINANCE)

Test Point	Adj. Point	Mode	Input
J104 (C-REC) J89 (RF-SW)	VR3002 (PCR) (TAPE 1 Y/C PROCESS PCB)	REC	Blank Tape PAL Blue-green signal
Tape	M. EQ.	Spec.	
Blank Tape	Pattern Generator Oscilloscope	50mVp-p±5%	

Connections of M. EQ.

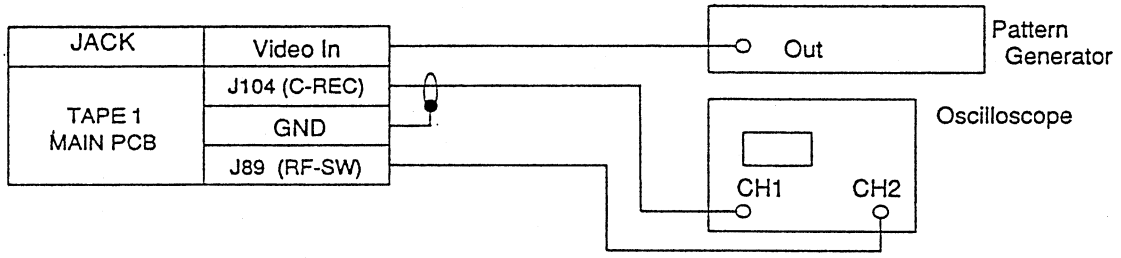

Figure

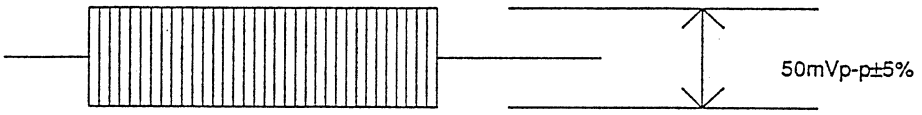

Reference Notes:

1. Connect equipments as shown in the above table.
2. TAPE 1 Color system switch= Auto Mode.
3. Input PAL Blue-green signal only to Video Input.
4. Adjust VR3002 so that chroma level becomes 50mVp-p±5%.

REC. CURRENT ADJUSTMENT (SECAM CHROMINANCE)

Test Point	Adj. Point	Mode	Input
J104 (C-REC) J89 (RF-SW)	VR3006 (SCR) (TAPE 1 Y/C PROCESS PCB)	REC	Blank Tape SECAM Blue-green signal
Tape	M. EQ.	Spec.	
Blank Tape	Pattern Generator Oscilloscope	50mVp-p±10%	

Connections of M. EQ.

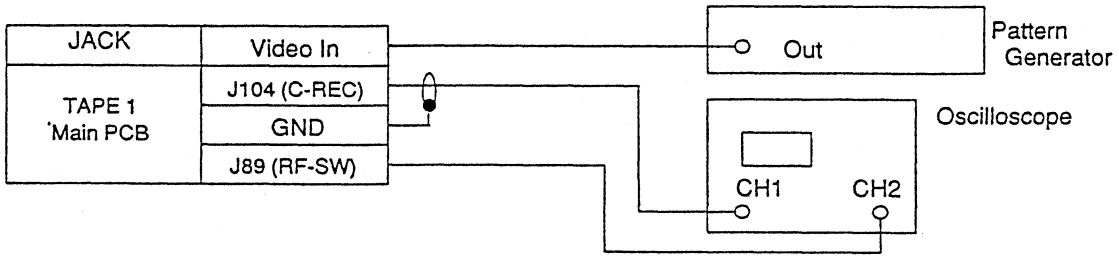

Figure

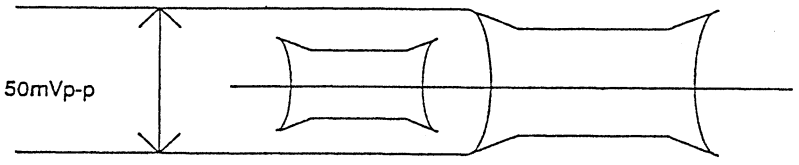

Reference Notes:

1. Connect equipments as shown in the above table.
2. TAPE 1 Color system switch= Auto Mode.
3. Input SECAM Blue-green signal only to Video Input.
4. Adjust VR3006 so that chroma level becomes 50mVp-p±10%.

REC EQ ADJUSTMENT

Test Point	Adj. Point	Mode	Input
J104 (C-REC)	T3001 (REC EQ) (TAPE 1 Y/C PROCESS PCB)	REC	Blank Tape SECAM BELL signal
Tape	M. EQ.	Spec.	
Blank Tape	SECAM Video Analyzer Oscilloscope	See below	

Connections of M. EQ.

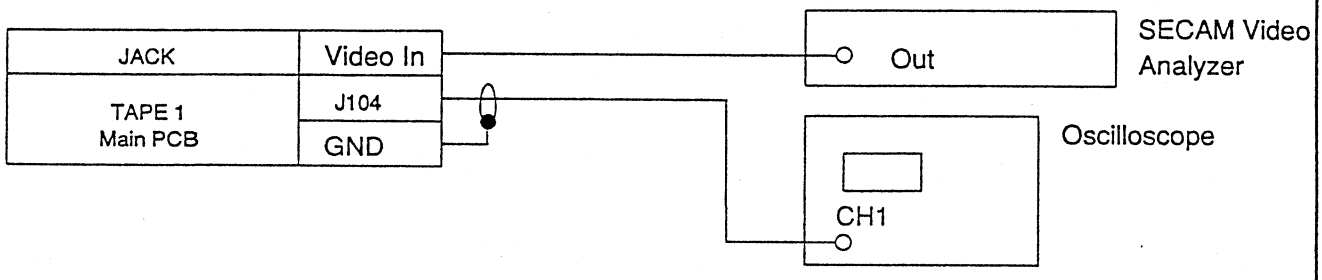

Figure

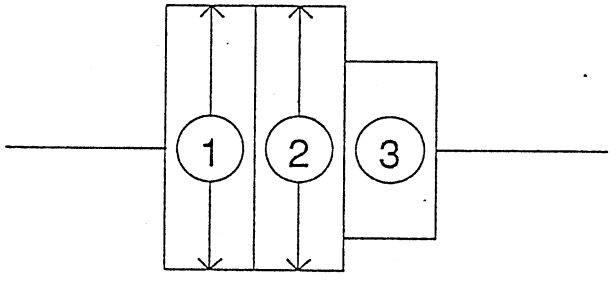

Reference Notes:

1. Connect equipments as shown in the above table.
2. TAPE 1 Color system switch= Auto Mode.
3. Input SECAM BELL signal to Video Input.
4. Adjust T3001 to make the same voltage at ① and ②.

REC BELL ADJUSTMENT

Test Point	Adj. Point	Mode	Input
TP3002 (REC BELL)	T3002 (REC BELL) (TAPE 1 Y/C PROCESS PCB)	REC	Blank Tape SECAM BELL signal
Tape	M. EQ.	Spec.	
Blank Tape	SECAM Video Analyzer Oscilloscope	See below	

Connections of M. EQ.

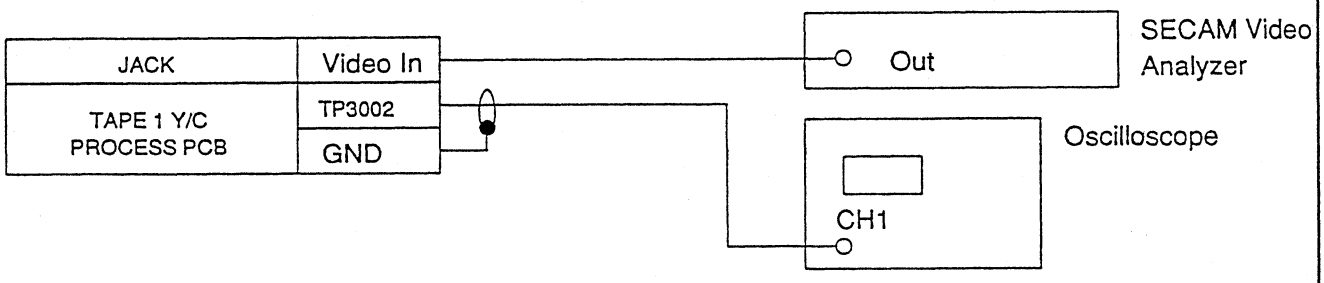

Figure

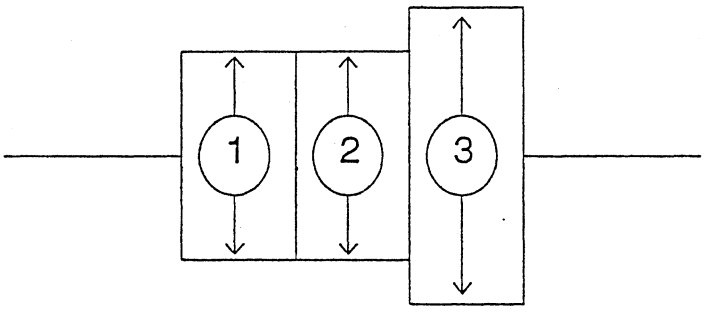

Reference Notes:

1. Connect equipments as shown in the above table.
2. TAPE 1 Color system switch= Auto Mode.
3. Input SECAM BELL signal to Video Input.
4. Adjust T3002 to make the same voltage at ① and ②.

P.B. OUTPUT LEVEL ADJUSTMENT

Test Point	Adj. Point	Mode	Input
J35 (V-OUT) GND	VR3009 (P.B.) (TAPE 1 Y/C PROCESS PCB)	PLAY	---
Tape	M. EQ.	Spec.	
F6-A	TV Monitor Oscilloscope	1.0Vp-p±0.05V	

Connections of M. EQ.

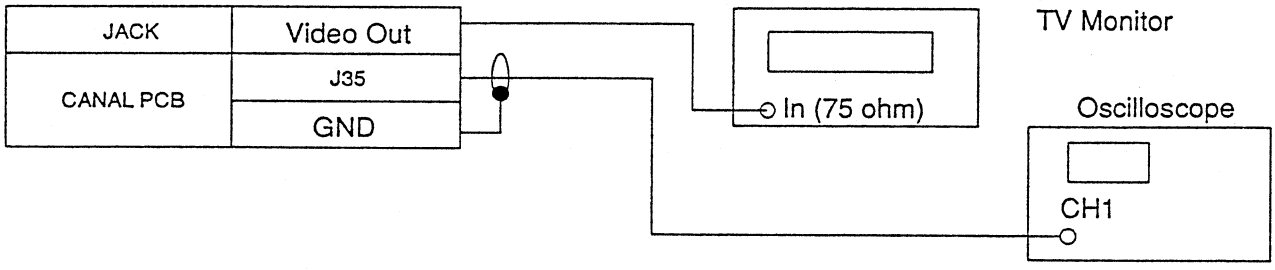

Figure

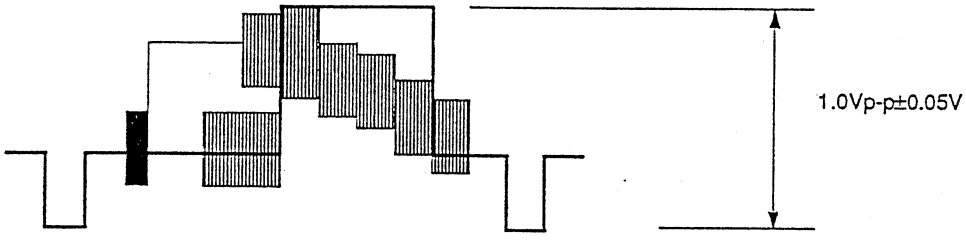

Reference Notes:

1. Connect equipments as shown in the above table.
2. TAPE 1 Color system switch= Auto Mode.
3. Adjust VR3009 so that the video level becomes 1.0Vp-p±0.05V.

PB EQ ADJUSTMENT

Test Point	Adj. Point	Mode	Input
T3004 (5)Pin (PB EQ)	T3003 (PB EQ) (TAPE 1 Y/C PROCESS PCB)	P. B	---
Tape	M. EQ.	Spec.	
F7-BELL	Oscilloscope	See below	

Connections of M. EQ.

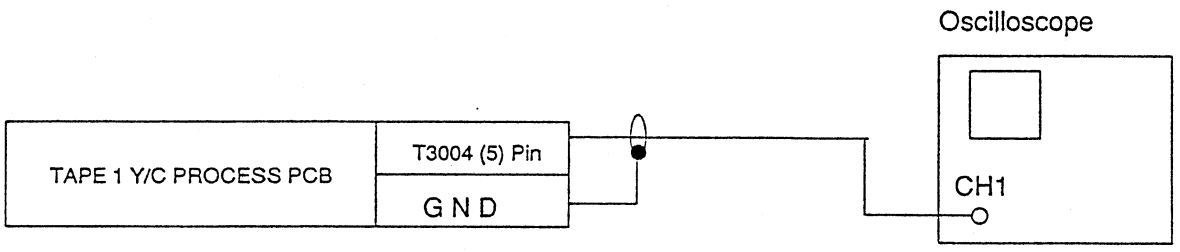

Figure

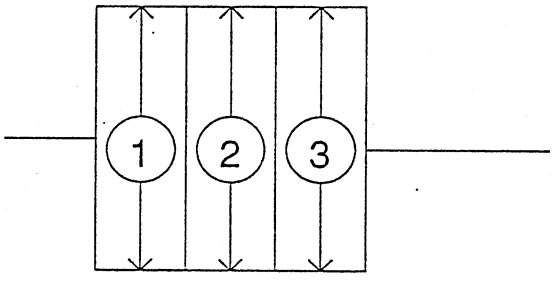

Reference Notes:

1. Connect equipments as shown in the above table.
2. TAPE 1 Color system switch= Auto Mode.
3. Playback test tape adjust T3003 to make the same voltage at ①, ② and ③.

SECAM-L PB F-V DETECTOR

Test Point	Adj. Point	Mode	Input
IC3005 (8) Pin or (12) Pin (SECAM-L PB F-V DETECTOR)GND	VR3094 (SECAM-L PB F-V DETECTOR) (TAPE 1 Y/C PROCESS PCB)	PLAY	---
Tape	M. EQ.	Spec.	
F7-BELL	Oscilloscope TV Monitor	See below	

Connections of M. EQ.

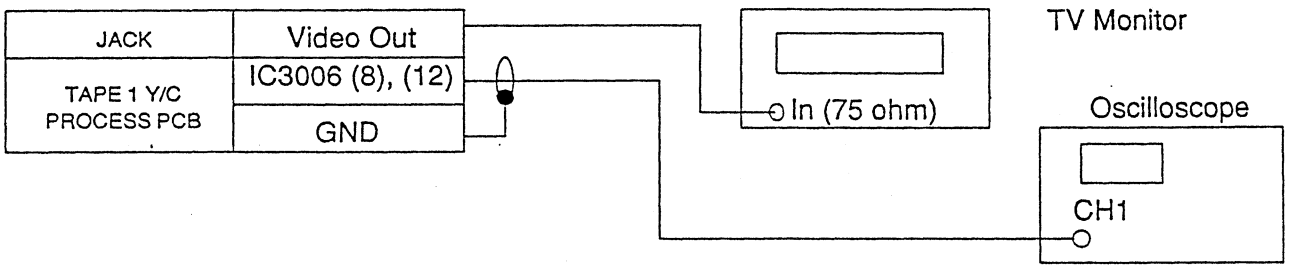

Figure

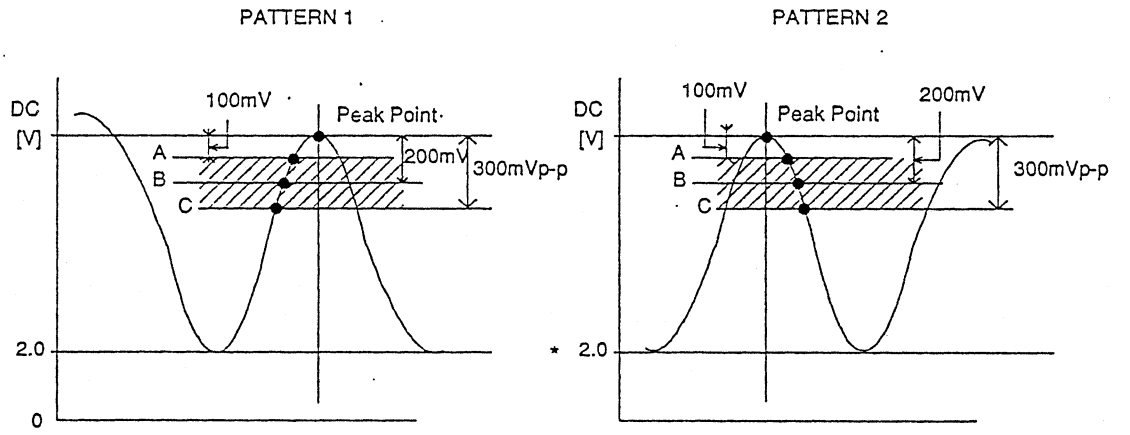

Note :

From Peak Point to A Point -------- : No colored Area
From A Point to C Point ---------- : Colored Area
B Point ---------- : Peak of Colored Area
Below of C Point ---------- : No colored Area

Reference Notes:*

1. Connect equipments as shown in the above table.
2. TAPE 1 Color system switch = Auto Mode.
3. Turn the VR3094 slowly to be obtained the Peak Point to Maximum.
   Then hold about 2 seconds, and turn the VR3094 again to be obtained the specification as shown in the above table.

H. BLANKING ADJUSTMENT

Test Point	Adj. Point	Mode	Input
J35 (V-OUT)	VR3007 (BPP) (TAPE 1 Y/C PROCESS PCB)	P.B	---
Tape	M. EQ.	Spec.	
F7-A	Oscilloscope	1.2μsec ±0.2μsec	

Connections of M. EQ.

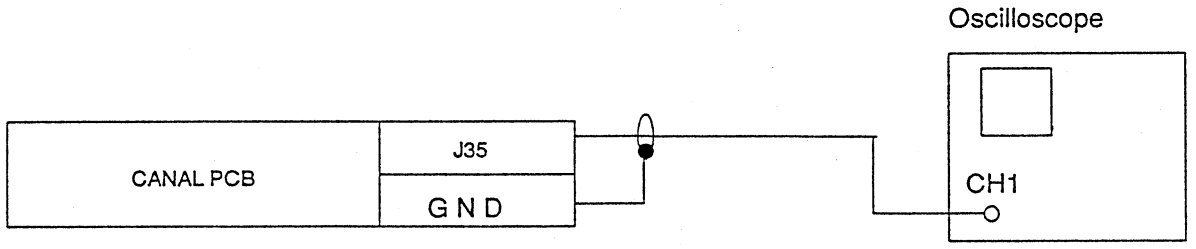

Figure

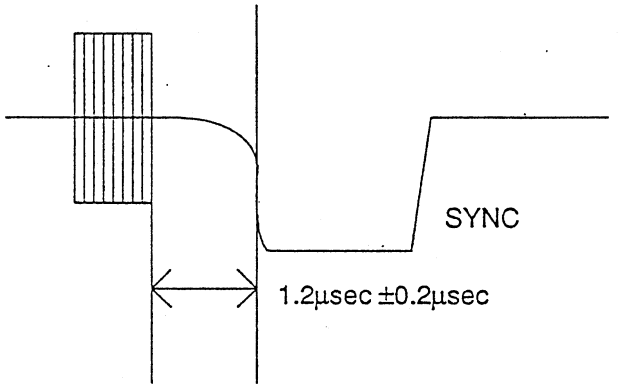

Reference Notes:

1. Connect equipments as shown in the above table.
2. TAPE 1 Color system switch = Auto Mode.
3. Playback test tape and adjust VR3007 so that the H.BLANKING becomes 1.2μsec ±0.2μsec.

REC. BIAS CURRENT ADJUSTMENT

Purpose:

Set Optimum Record Audio Bias Level.

Symptom of Misadjustment:

If Audio Bias Level is too high, the Frequency Responce deteriorates. If the level is too low, sound distortion may cause.

Test Point	Adj. Point	Mode	Input
J107 (BIAS +) J106 (BIAS –)	VR4001 (BIAS) (TAPE 1 Main PCB)	REC (SP)	---
Tape	M. EQ.	Spec.	
Blank Tape	AC Voltmeter (RMS)	24.0±0.5mV RMS	

Connections of M. EQ.

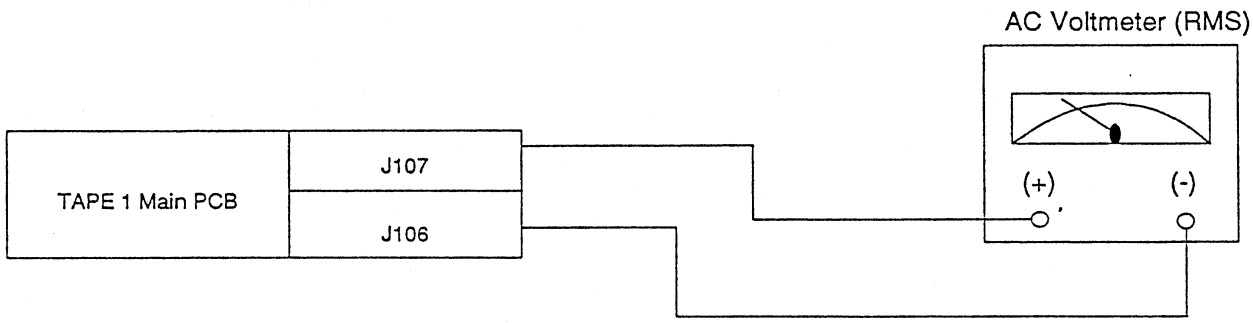

Reference Notes:

1. Connect equipments as shown in the above table.
2. Insert a blank tape and set the VCR to REC mode.
   (Do not set to PAUSE mode, the bias oscillation is stopped.)
3. Adjust VR4001 so that the voltage becomes 24±0.5mV RMS.

AUDIO OUTPUT LEVEL ADJUSTMENT

Test Point	Adj. Point	Mode	Input
J65 (A-OUT) J80 GND A	VR4002 (A-OUT) (TAPE 1 MAIN PCB)	PLAY	---
Tape	M. EQ.	Spec.	
F6-A	AC Voltmeter (RMS)	See Below	

Connections of M. EQ.

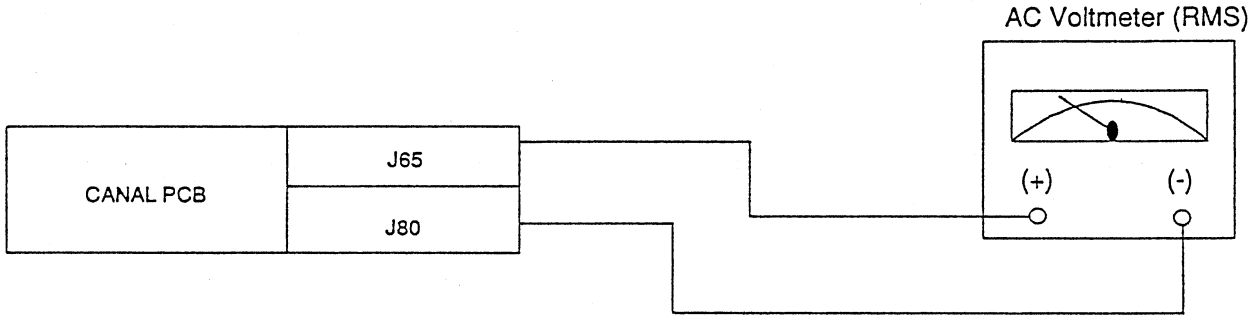

Reference Notes:

1. Connect equipment as shown in the above table.
2. Playback the test tape by Cass. 2, while measuring the audio output level.
   Then playback the same test tape by Cass. 1, while measuring the same test tape level.
3. Adjust VR4002 so that both audio output level is equal.

ELECTRICAL ADJUSTMENT INSTRUCTIONS [TAPE 2]

NOTE:
Electrical adjustment are required after replacing circuit components and certain mechanical parts. It is important to perform these adjustments only after all repairs and replacements have been completed. Also, do not attempt these adjustments unless the proper equipment is available.

TEST EQUIPMENT REQUIRED

1. Oscilloscope: Dual-trace with 10:1 probe.
2. TV Monitor
3. Pattern Generator (Color bar with 100% white)
4. AC Voltmeter (RMS)
5. Test Tape F6-A, F7-A, F7-BELL
6. Spectrum Analyzer, Frequency Counter
7. SECAM Video Analyzer

HEAD SWITCHING POSITION ADJUSTMENT

Test Point	Adj. Point	Mode	Input
J71 (V-OUT) J49 (RF-SW) GND	VR2101 (Switching Point) (TAPE 2 MAIN PCB)	PLAY	---
Tape	M. EQ.	Spec.	
F6-A	Oscilloscope	6.5H(416μs)	

Connections of M. EQ.

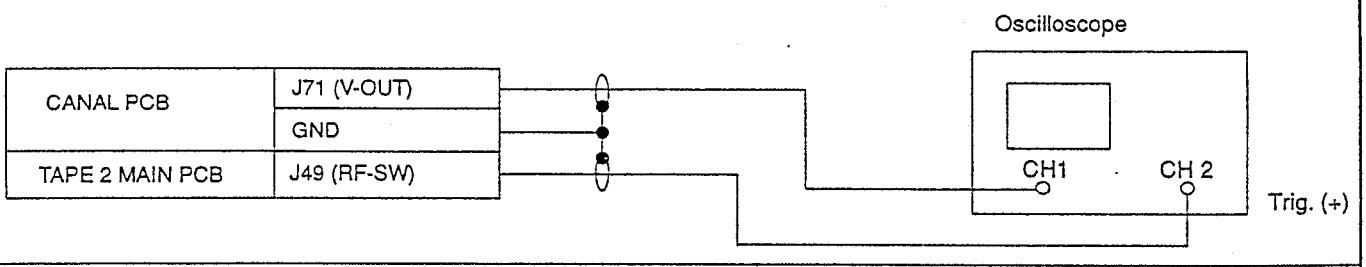

Figure

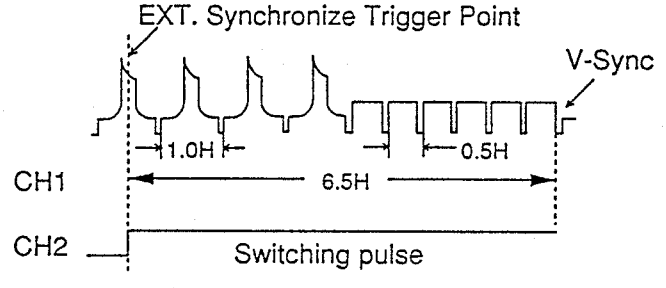

Reference Notes:

1. Connect equipments as shown in the above table.
2. Set the input trigger mode to CH2 and set trigger slope to (+).
3. Adjust the Tracking control to its center position. Press + and – of Tracking control Button at same time.
4. Playback the test tape and adjust VR2101 so that the V-sync front edge of CH1 video output waveform is delayed 6.5H(416μs) from the rising of CH2 Head Switching pulse waveform.

E-E LEVEL ADJUSTMENT

Test Point	Adj. Point	Mode	Input
J71 (V-OUT) GND	VR3003 (E-E) (TAPE 2 Y/C PROCESS PCB)	E-E	Color Bar signal with 100% White
Tape	M. EQ.	Spec.	
----	Pattern Generator TV Monitor Oscilloscope	1.0Vp-p±0.05V	

Connections of M. EQ.

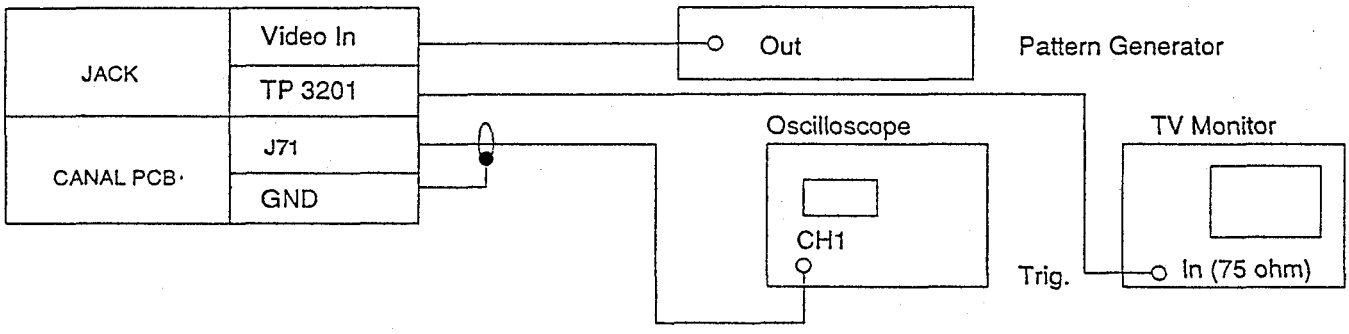

Figure

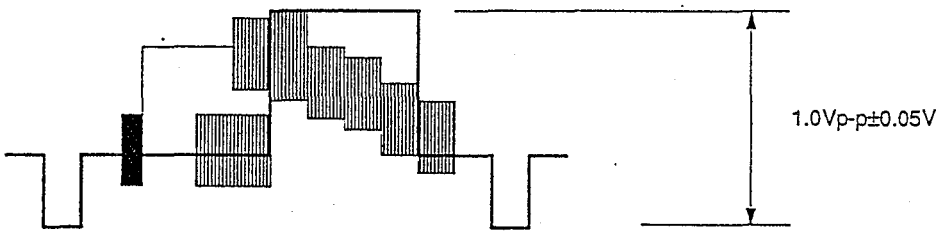

Reference Notes:

1. Connect equipments as shown in the above table.
2. TAPE 2 Color system switch= Auto Mode.
3. Input Color Bar signal with 100% White to Video Input.
4. Adjust VR3003 so that the video level becomes 1.0Vp-p±0.05V.

FM CARRIER DEVIATION ADJUSTMENT

Test Point	Adj. Point	Mode	Input
J41 (Y-REC)	VR3004 (CRR) VR3005 (DEV) (TAPE 2 Y/C PROCESS PCB)	REC (SP)	Blank Tape Color Bar signal with 100% White
Tape	M. EQ.	Spec.	
Blank Tape	Pattern Generator Spectrum Analyzer Oscilloscope	Sync-tip to 3.8MHz±0.05MHz White-peak to 4.8MHz±0.05MHz	

Connections of M. EQ.

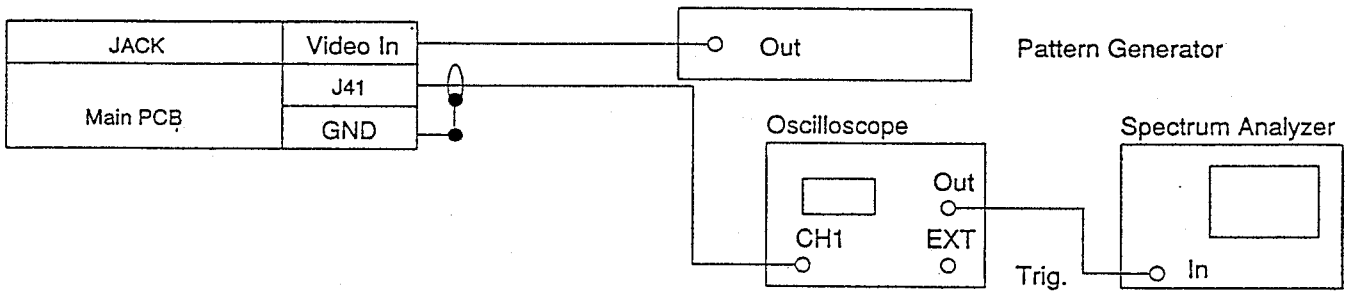

Figure

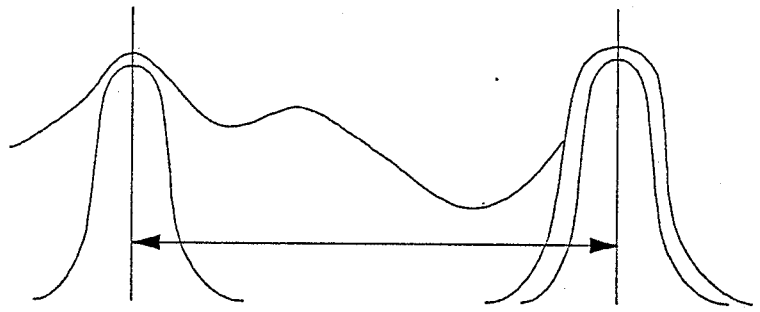

Reference Notes:

1. Connect equipments as shown in the above table.
2. TAPE 2 Color system switch= Auto Mode.
3. Input Color Bar signal with 100% White to Video Input.
4. Adjust Sync-tip to 3.8MHz±0.05MHz by VR3004, White-peak to 4.8MHz±0.05MHz by VR3005.

PAL/SECAM F-V DETECTOR

Test Point	Adj. Point	Mode	Input
IC3006 (8)Pin or (12)Pin	VR3008 (PAL/SECAM REC SELECTOR) (TAPE 2 Y/C PROCESS PCB)	E-E	PAL Color Bar signal with 100% White
Tape	M. EQ.	Spec.	
---	Pattern Generator Oscilloscope	DC 2.45~2.5V	

Connections of M. EQ.

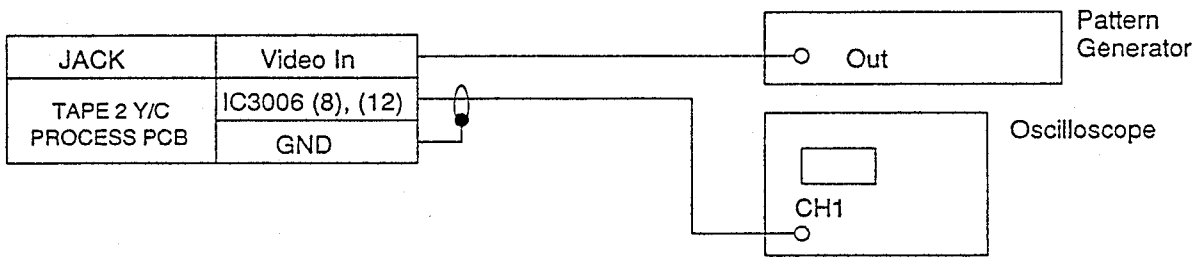

Figure

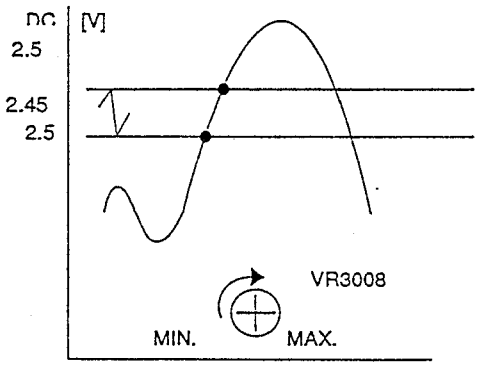

Reference Notes:

1. Connect equipments as shown in the above table.
2. TAPE 2 Color system switch= Auto Mode.
3. Adjust VR3008 so that the DC Voltage level becomes DC 2.45~2.5V.

REC. CURRENT ADJUSTMENT (PAL CHROMINANCE)

Test Point	Adj. Point	Mode	Input
J40 (C-REC) J49 (RF-SW)	VR3002 (PCR) (TAPE 2 Y/C PROCESS PCB)	REC	Blank Tape PAL Blue-green signal
Tape	M. EQ.	Spec.	
Blank Tape	Pattern Generator Oscilloscope	50mVp-p±5%	

Connections of M. EQ.

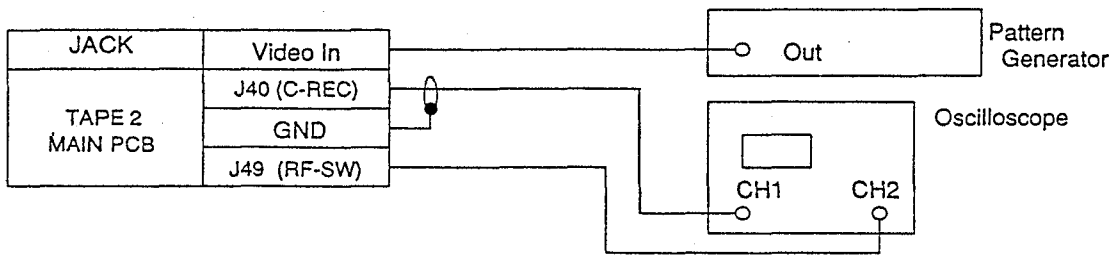

Figure

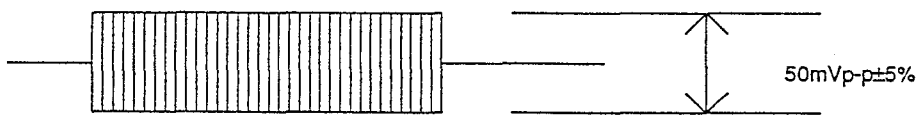

Reference Notes:

1. Connect equipments as shown in the above table.
2. TAPE 2 Color system switch= Auto Mode.
3. Input PAL Blue-green signal only to Video Input.
4. Adjust VR3002 so that chroma level becomes 50mVp-p±5%.

REC. CURRENT ADJUSTMENT (SECAM CHROMINANCE)

Test Point	Adj. Point	Mode	Input
J40 (C-REC) J49 (RF-SW)	VR3006 (SCR) (TAPE 2 Y/C PROCESS PCB)	REC	Blank Tape SECAM Blue-green signal
Tape	M. EQ.	Spec.	
Blank Tape	Pattern Generator Oscilloscope	50mVp-p±10%	

Connections of M. EQ.

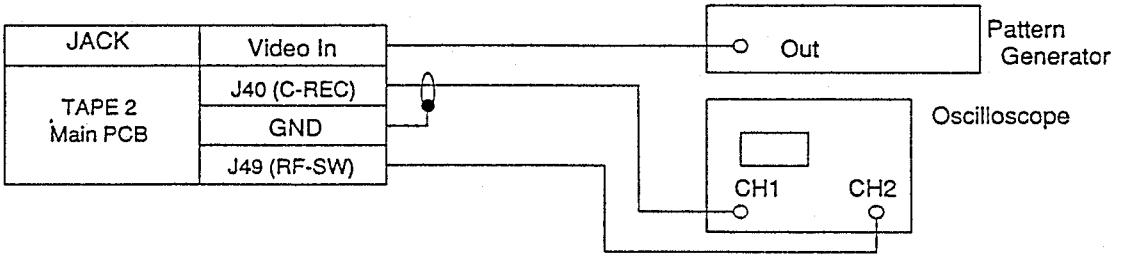

Figure

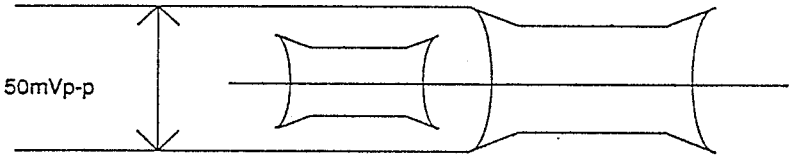

Reference Notes:

1. Connect equipments as shown in the above table.
2. TAPE 2 Color system switch= Auto Mode.
3. Input SECAM Blue-green signal only to Video Input.
4. Adjust VR3006 so that chroma level becomes 50mVp-p±10%.

REC EQ ADJUSTMENT

Test Point	Adj. Point	Mode	Input
J40 (C-REC)	T3001 (REC EQ) (TAPE 2 Y/C PROCESS PCB)	REC	Blank Tape SECAM BELL signal
Tape	M. EQ.	Spec.	
Blank Tape	SECAM Video Analyzer Oscilloscope	See below	

Connections of M. EQ.

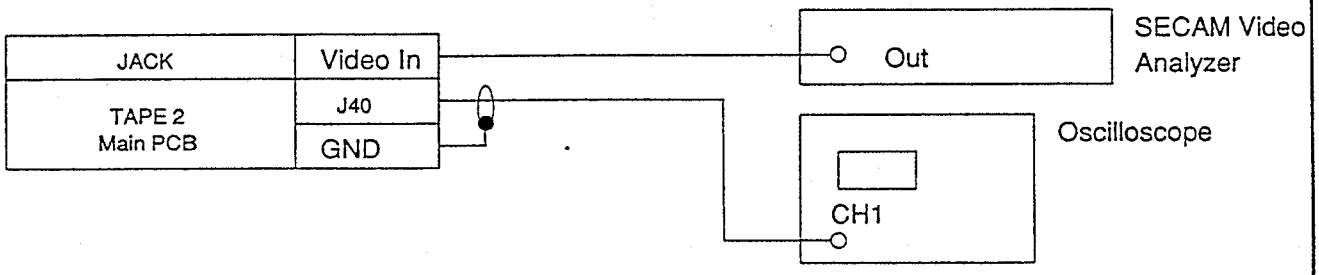

Figure

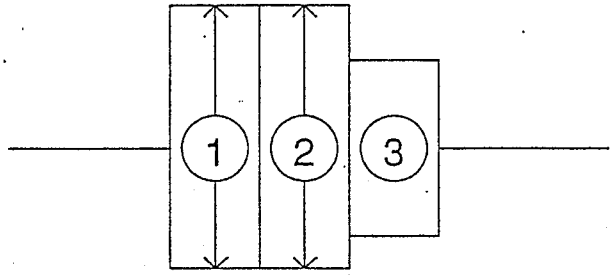

Reference Notes:

1. Connect equipments as shown in the above table.
2. TAPE 2 Color system switch= Auto Mode.
3. Input SECAM BELL signal to Video Input.
4. Adjust T3001 to make the same voltage at ① and ②.

REC BELL ADJUSTMENT

Test Point	Adj. Point	Mode	Input
TP3002 (REC BELL)	T3002 (REC BELL) (TAPE 2 Y/C PROCESS PCB)	REC	Blank Tape SECAM BELL signal
Tape	M. EQ.	Spec.	
Blank Tape	SECAM Video Analyzer Oscilloscope	See below	

Connections of M. EQ.

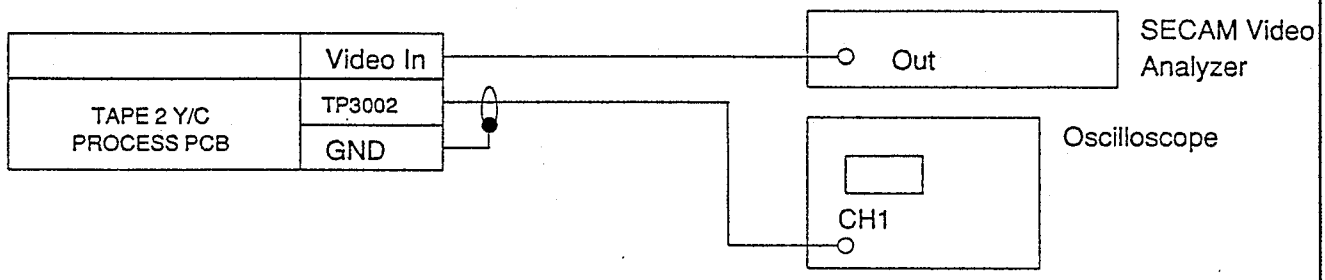

Figure

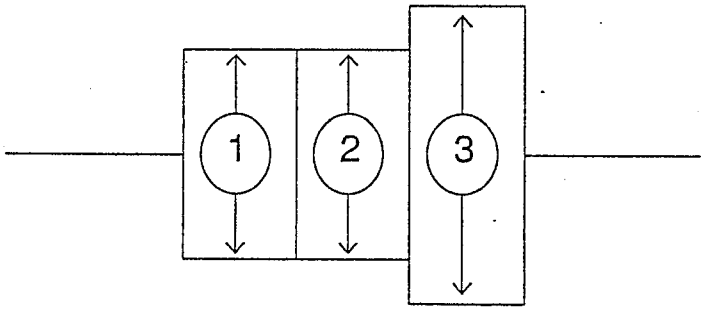

Reference Notes:

1. Connect equipments as shown in the above table.
2. TAPE 2 Color system switch= Auto Mode.
3. Input SECAM BELL signal to Video Input.
4. Adjust T3002 to make the same voltage at ① and ②.

P.B. OUTPUT LEVEL ADJUSTMENT

Test Point	Adj. Point	Mode	Input
J71 (V-OUT) GND	VR3009 (P.B.) (TAPE 2 Y/C PROCESS PCB)	PLAY	---
Tape	M. EQ.	Spec.	
F6-A	TV Monitor Oscilloscope	1.0Vp-p±0.05V	

Connections of M. EQ.

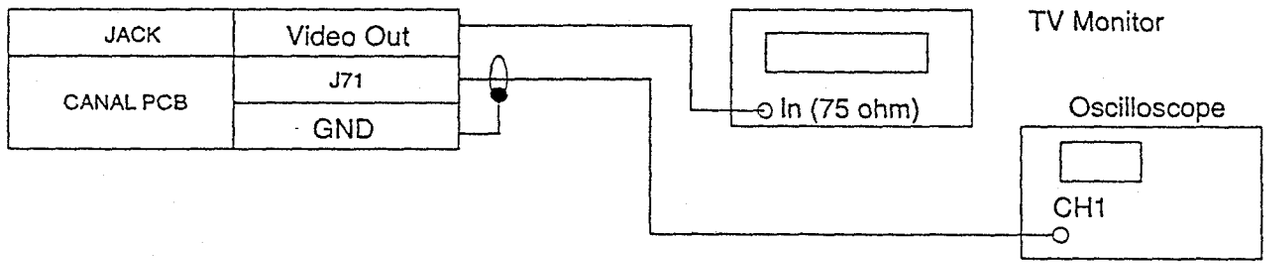

Figure

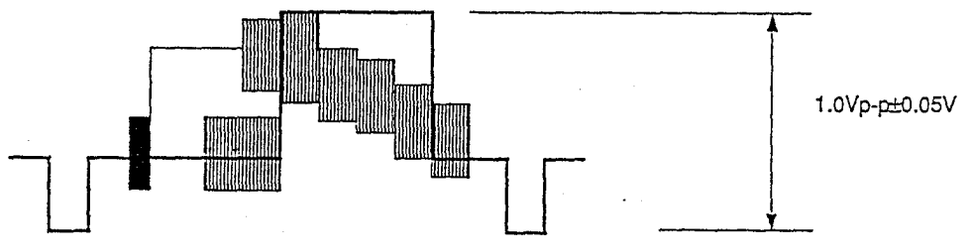

Reference Notes:

1. Connect equipments as shown in the above table.
2. TAPE 2 Color system switch= Auto Mode.
3. Adjust VR3009 so that the video level becomes 1.0Vp-p±0.05V.

PB EQ ADJUSTMENT

Test Point	Adj. Point	Mode	Input
T3004 (5)Pin (PB EQ)	T3003 (PB EQ) (TAPE 2 Y/C PROCESS PCB)	P. B	---
Tape	M. EQ.	Spec.	
F7-BELL	Oscilloscope	See below	

Connections of M. EQ.

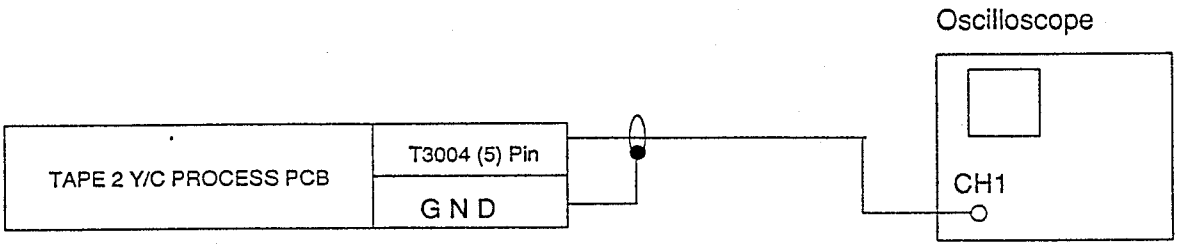

Figure

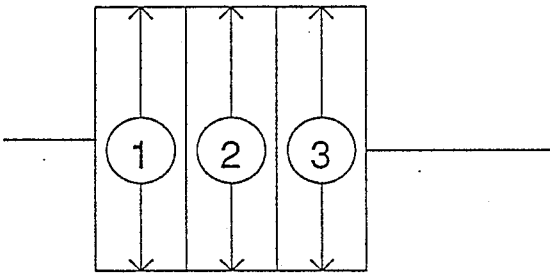

Reference Notes:

1. Connect equipments as shown in the above table.
2. TAPE 2 Color system switch= Auto Mode.
3. Playback test tape adjust T3003 to make the same voltage at ①, ② and ③.

SECAM-L PB F-V DETECTOR

Test Point	Adj. Point	Mode	Input
IC3005 (8) Pin or (12) Pin (SECAM-L PB F-V DETECTOR)GND	VR3094 (SECAM-L PB F-V DETECTOR) (TAPE 2 Y/C PROCESS PCB)	PLAY	---
Tape	M. EQ.	Spec.	
F7-BELL	Oscilloscope TV Monitor	See below	

Connections of M. EQ.

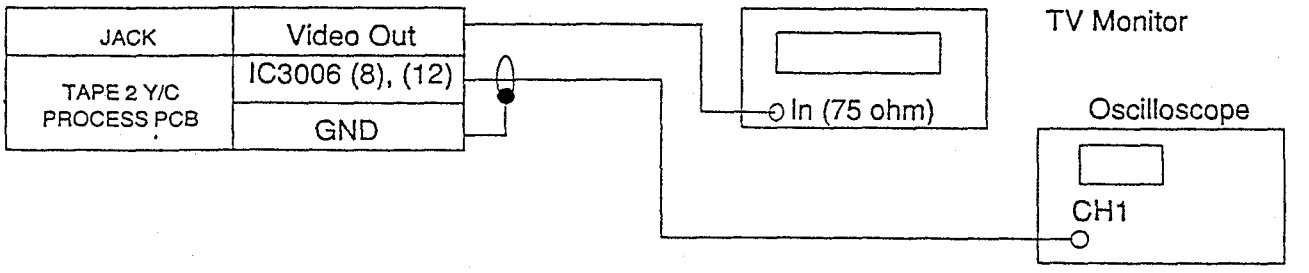

Figure

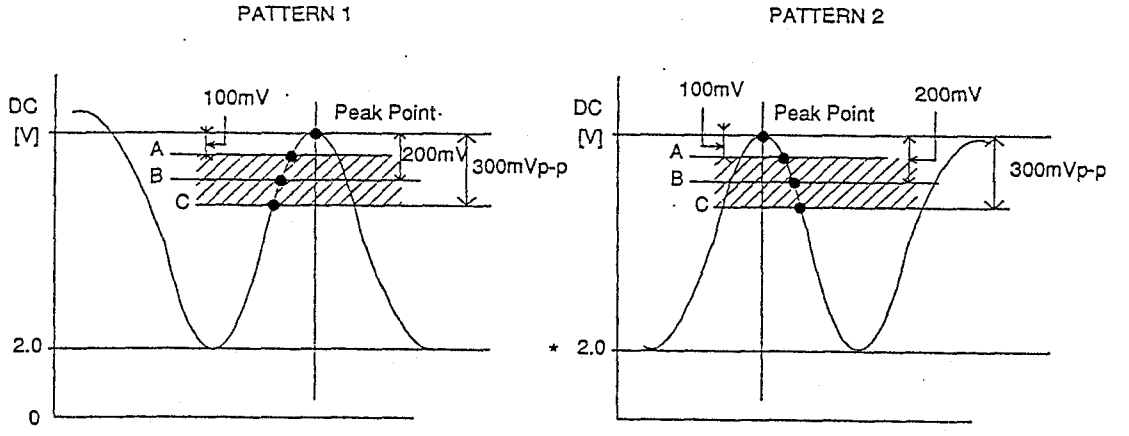

Note :

From Peak Point to A Point -------- : No colored Area
From A Point to C Point ---------- : Colored Area
B Point ---------- : Peak of Colored Area
Below of C Point ---------- : No colored Area

Reference Notes:*

1. Connect equipments as shown in the above table.
2. TAPE 2 Color system switch = Auto Mode.
3. Turn the VR3094 slowly to be obtained the Peak Point to Maximum.
   Then hold about 2 seconds, and turn the VR3094 again to be obtained the specification as shown in the above table.

H. BLANKING ADJUSTMENT

Test Point	Adj. Point	Mode	Input
J71 (V-OUT)	VR3007 (BPP) (TAPE 2 Y/C PROCESS PCB)	P.B	---
Tape	M. EQ.	Spec.	
F7-A	Oscilloscope	1.2µsec ±0.2µsec	

Connections of M. EQ.

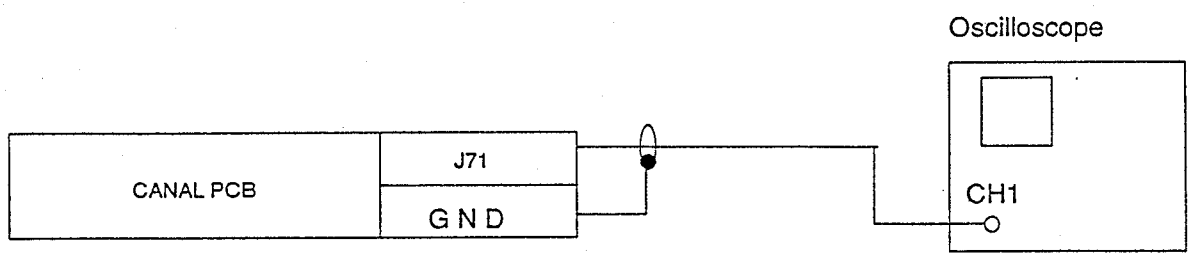

Figure

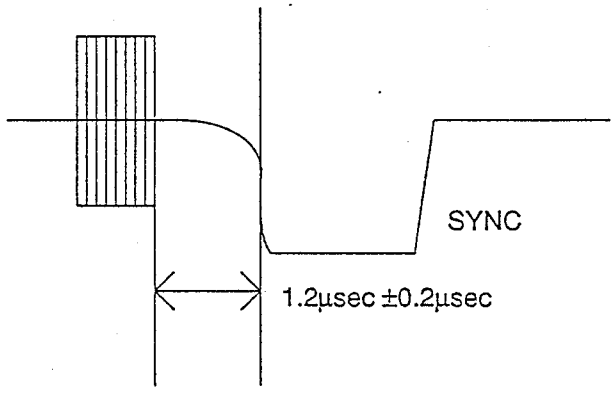

Reference Notes:

1. Connect equipments as shown in the above table.
2. TAPE 2 Color system switch = Auto Mode.
3. Playback test tape and adjust VR3007 so that the H.BLANKING becomes 1.2µsec ±0.2µsec.

REC. BIAS CURRENT ADJUSTMENT

Purpose:

Set Optimum Record Audio Bias Level.

Symptom of Misadjustment:

If Audio Bias Level is too high, the Frequency Responce deteriorates. If the level is too low, sound distortion may cause.

Test Point	Adj. Point	Mode	Input
J38 (BIAS +) J37 (BIAS –)	VR4101 (BIAS) (TAPE 2 Main PCB)	REC (SP)	---
Tape	M. EQ.	Spec.	
Blank Tape	AC Voltmeter (RMS)	24.0±0.5mV RMS	

Connections of M. EQ.

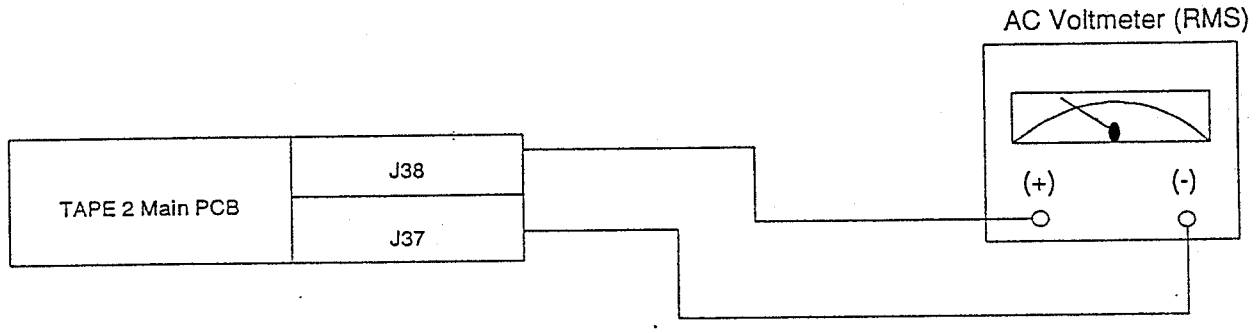

Reference Notes:

1. Connect equipments as shown in the above table.
2. Insert a blank tape and set the VCR to REC mode.
   (Do not set to PAUSE mode, the bias oscillation is stopped.)
3. Adjust VR4101 so that the voltage becomes 24±0.5mV RMS.

SCHEMATIC DIAGRAMS / C.B.A.S AND TEST POINTS

Standard Notes

WARNING

Many electrical and mechanical parts marked with in this chassis have special characteristics. These characteristics often pass unnoticed and the protection afforded by them cannot necessarily be obtained by using replacement components rated for higher voltage, wattage, etc. Replacement parts that have these special safety characteristics are identified in this manual and its supplements; electrical components having such features are identified by the mark shown below in the schematic diagram and the parts list. Before replacing any of these components, read the parts list in this manual carefully. The use of substitute replacement parts that do not have the same safety characteristics as specified in the parts list may create shock, fire, or other hazards.

Capacitor Temperature Markings

Mark	Capacity change rate	Standard tempera-ture	Tempera-ture range
(B)	±10%	20°C	-25~+85°C
(F)	+30 -80%	20°C	-25~+85°C
(SR)	±15%	20°C	-25~+85°C
(Z)	+30 -80%	20°C	-10~+70°C

Note :

1 Do not use the part number shown on these drawings for ordering. The correct part number is shown in the parts list, and may be slightly different or amended since these drawings were prepared.

2 All resistance values are indicated in ohms ($K=10^3$, $M=10^6$).

3 Resistor wattages are 1/5W or 1/6W unless otherwise specified.

4 All capacitance values are indicated in μF ($P=10^{-6}\mu F$).

5 All voltages are DC voltages unless otherwise specified.

6 Voltage Indications for PB and REC modes on the Schematics are as shown below.

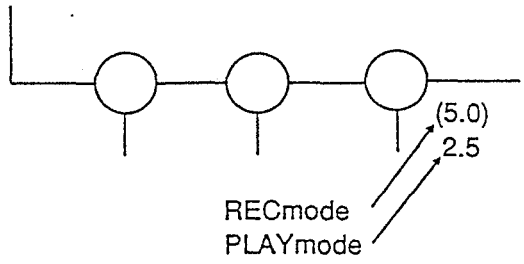

Capacitors and transistors are represented by the following symbols.

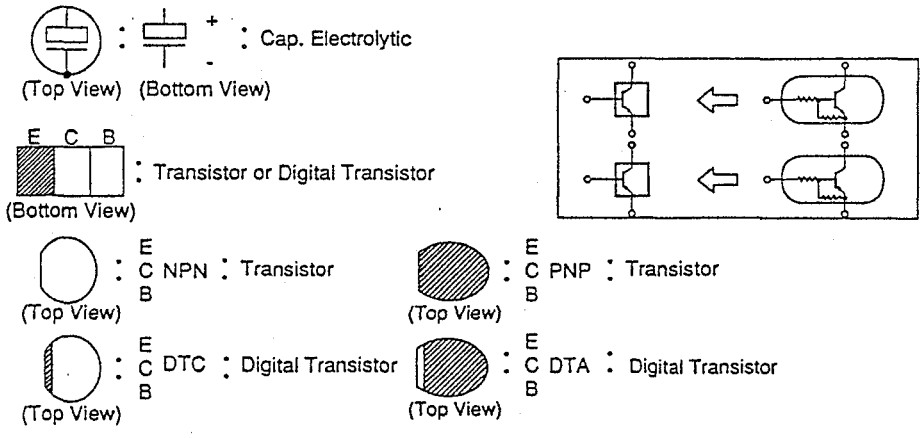

TAPE 1 MAIN SCHEMATIC DIAGRAM

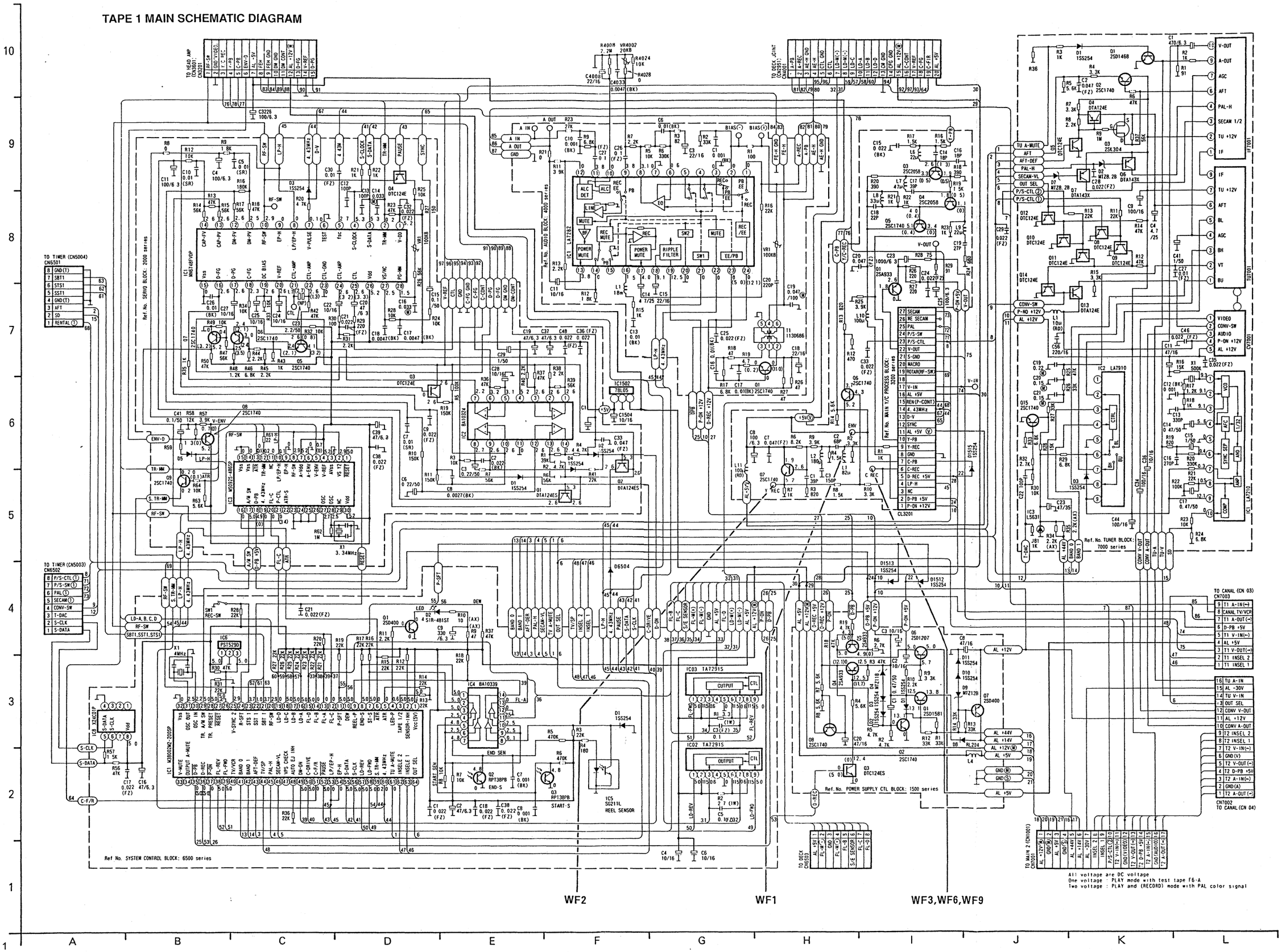

TAPE 1 MAIN P.C.BOARD TOP VIEW

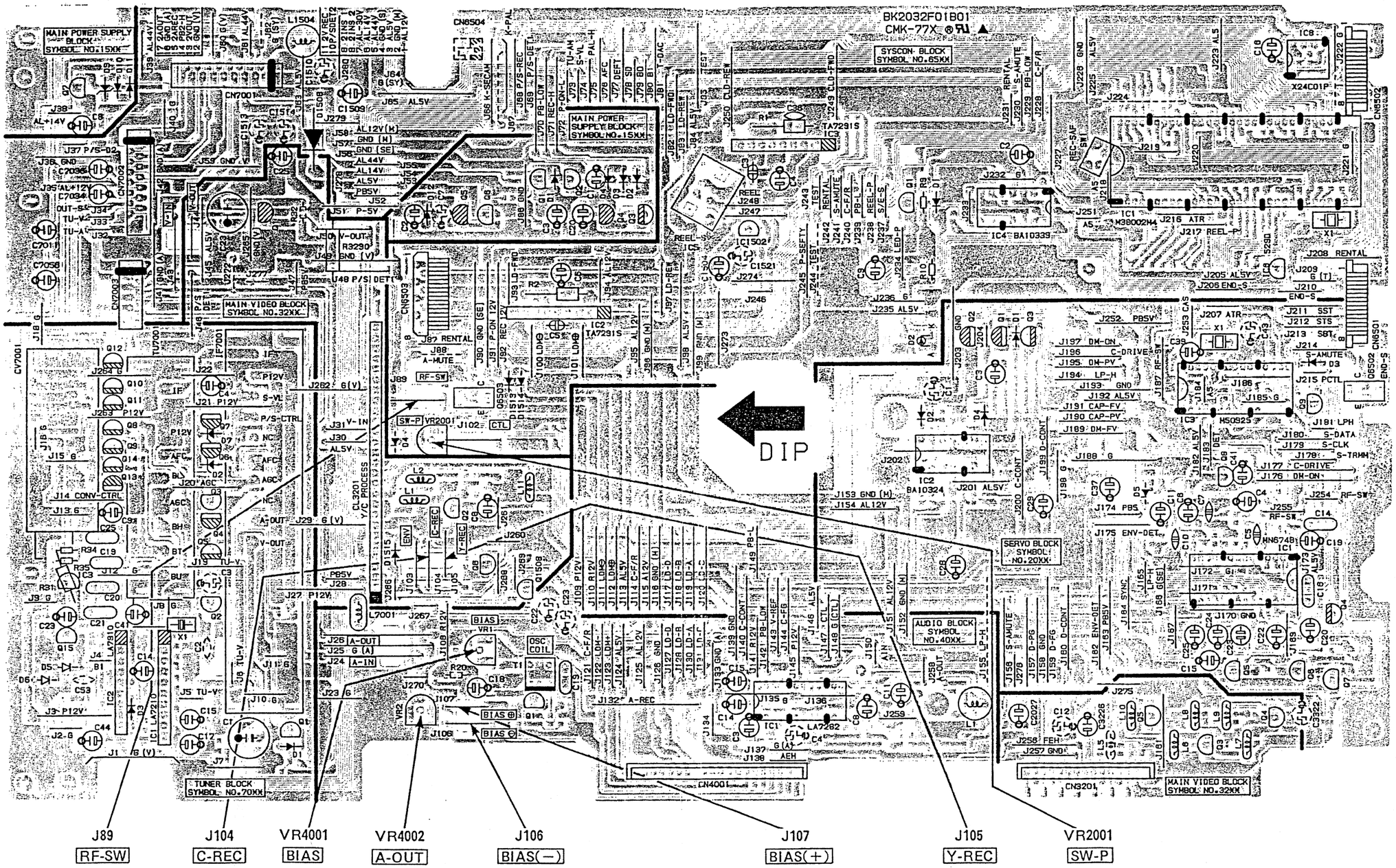

TAPE 1 MAIN P.C.BOARD BOTTOM VIEW

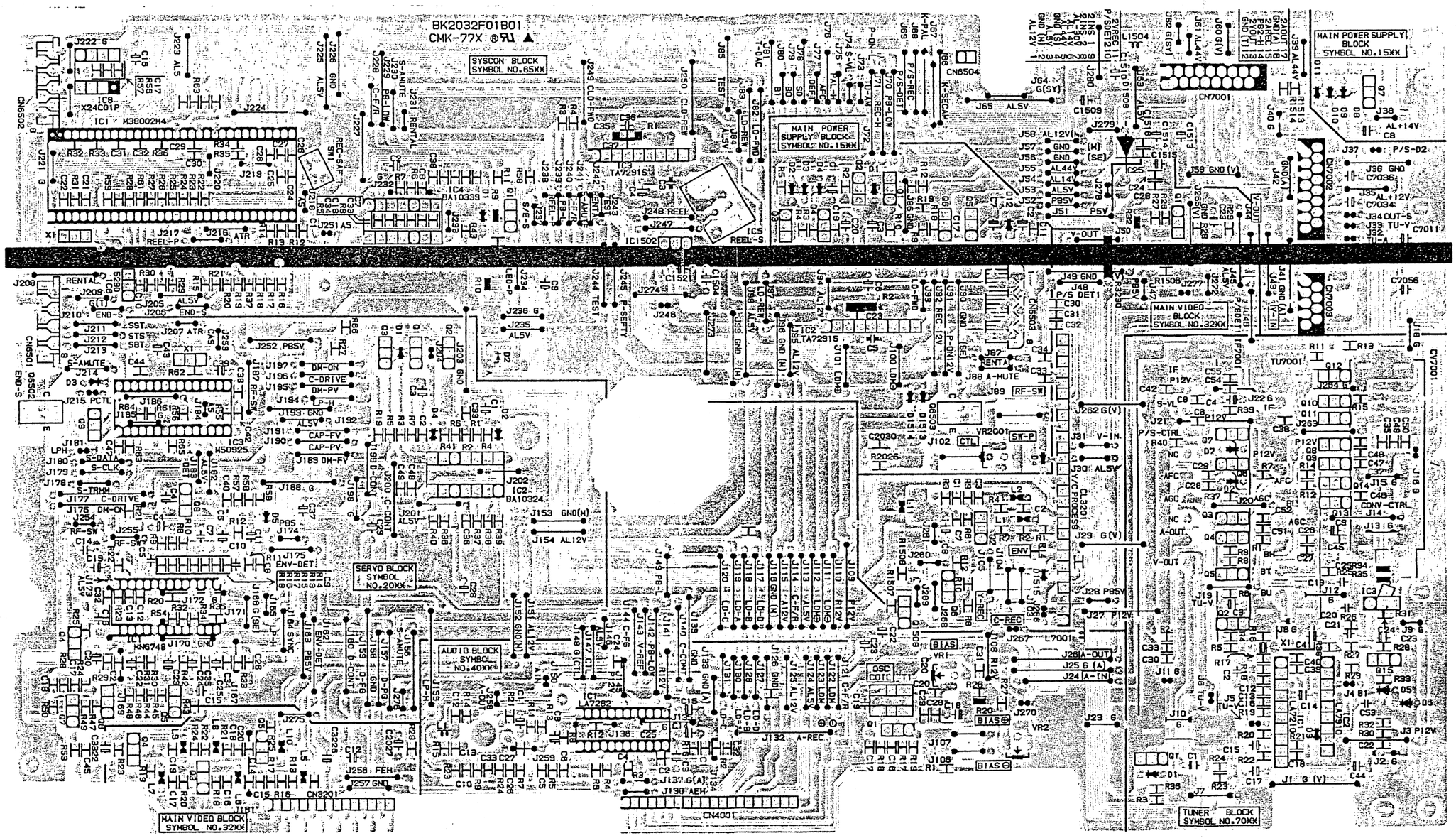

TAPE 2 MAIN SCHEMATIC DIAGRAM

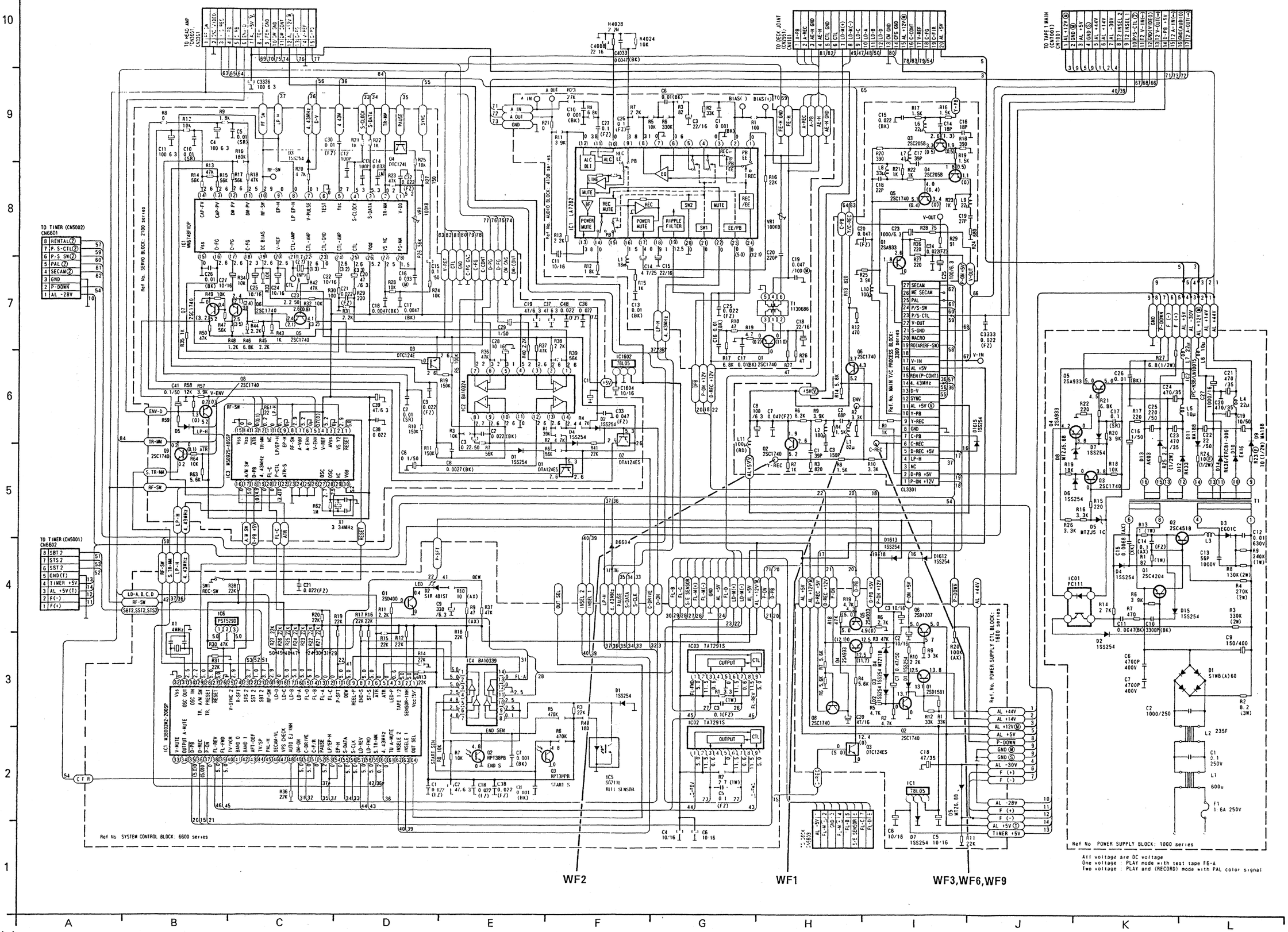

TAPE 2 MAIN P.C.BOARD TOP VIEW

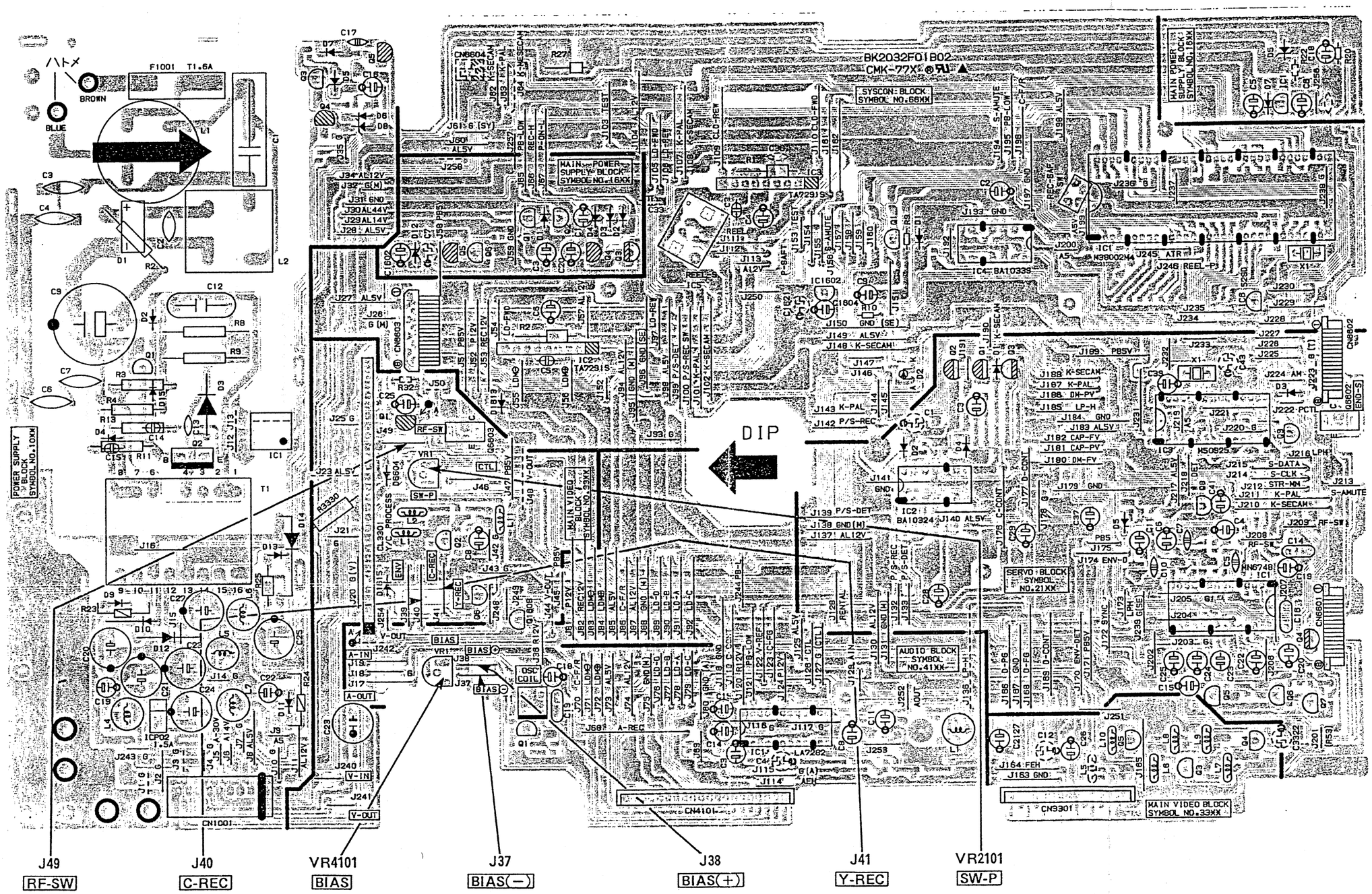

TAPE 2 MAIN P.C.BOARD BOTTOM VIEW

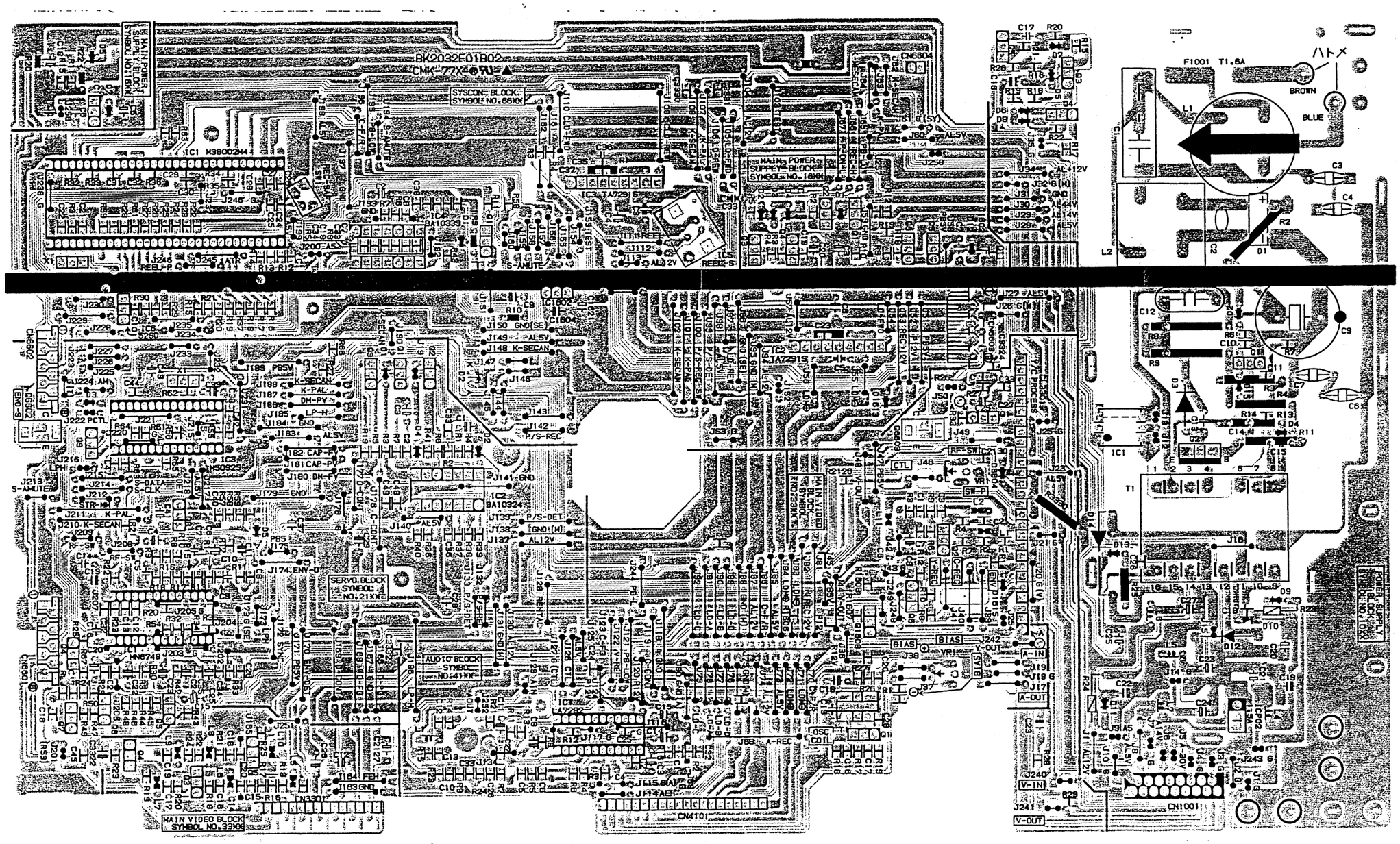

TAPE 1/TAPE 2 Y/C PROCESS SCHEMATIC DIAGRAM

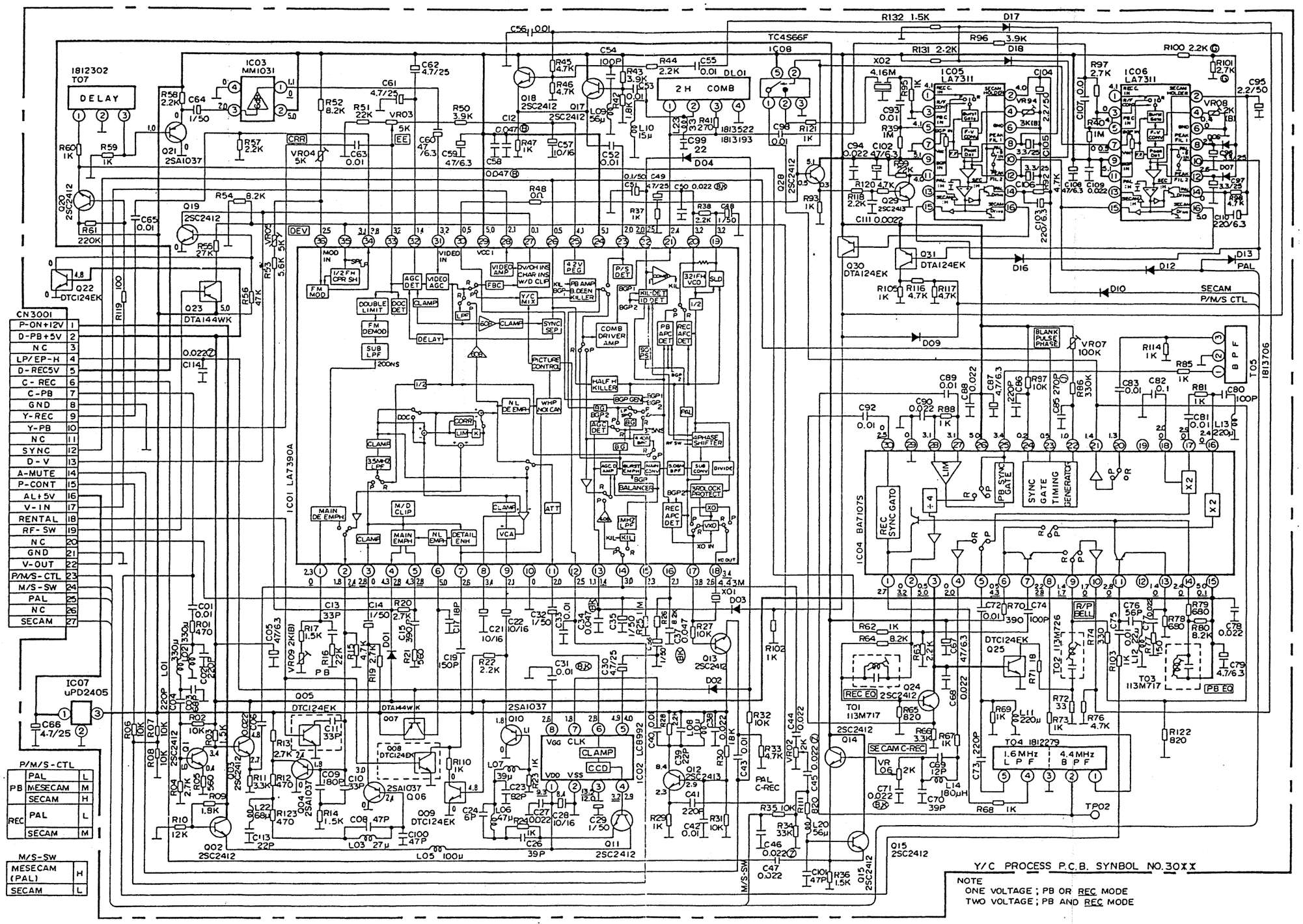

CANAL/JACK SCHEMATIC DIAGRAM

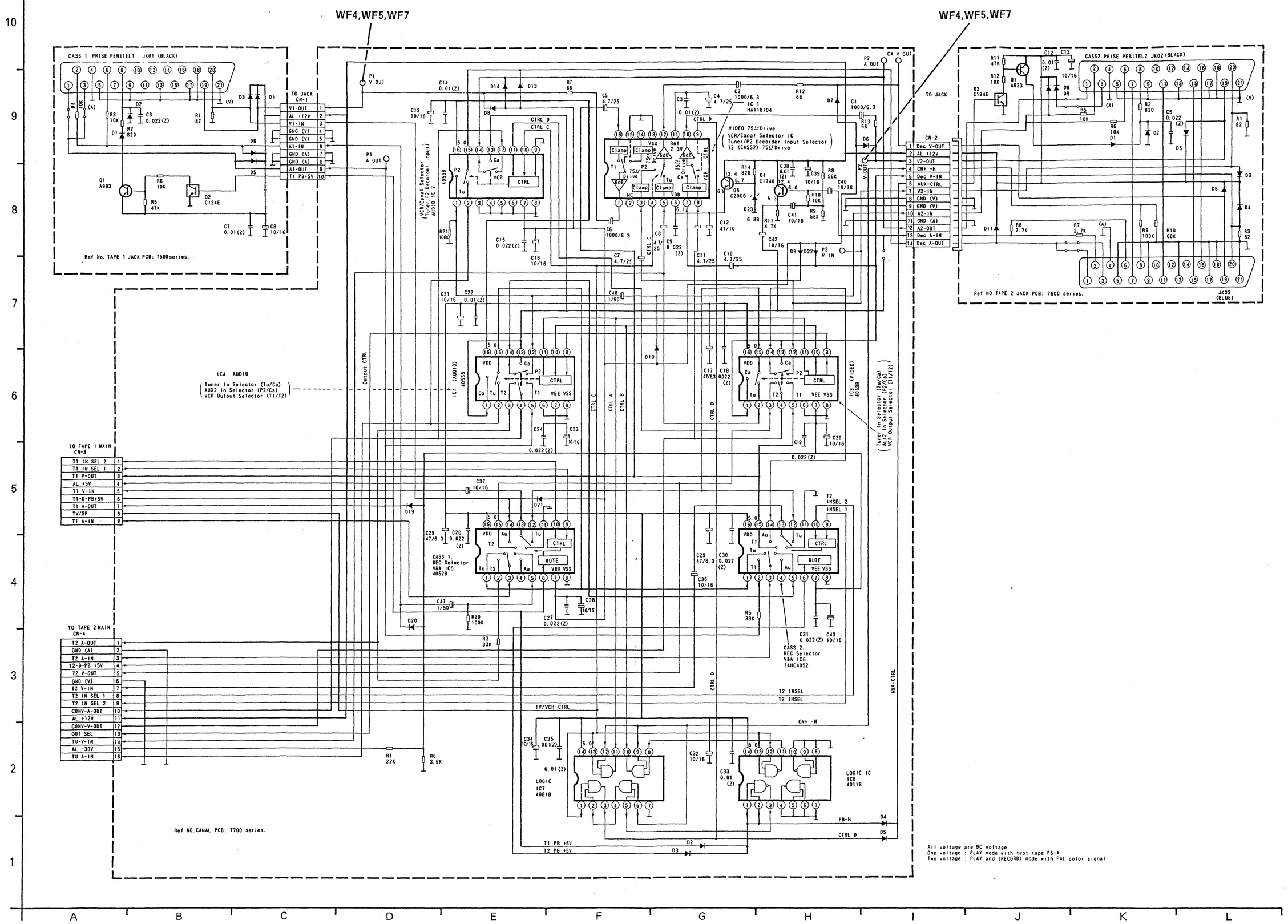

TAPE 1/TAPE 2 Y/C PROCESS P.C.BOARD

TOP VIEW

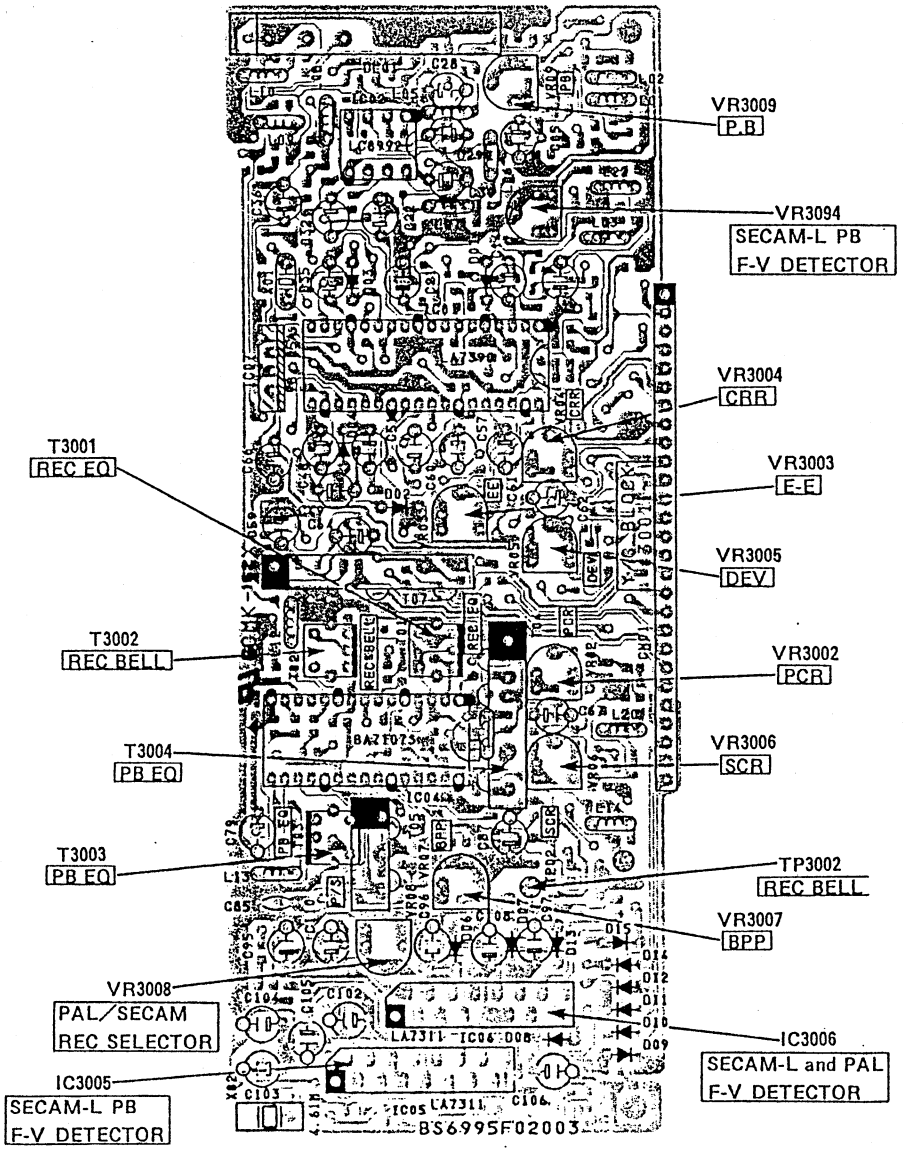

BOTTOM VIEW

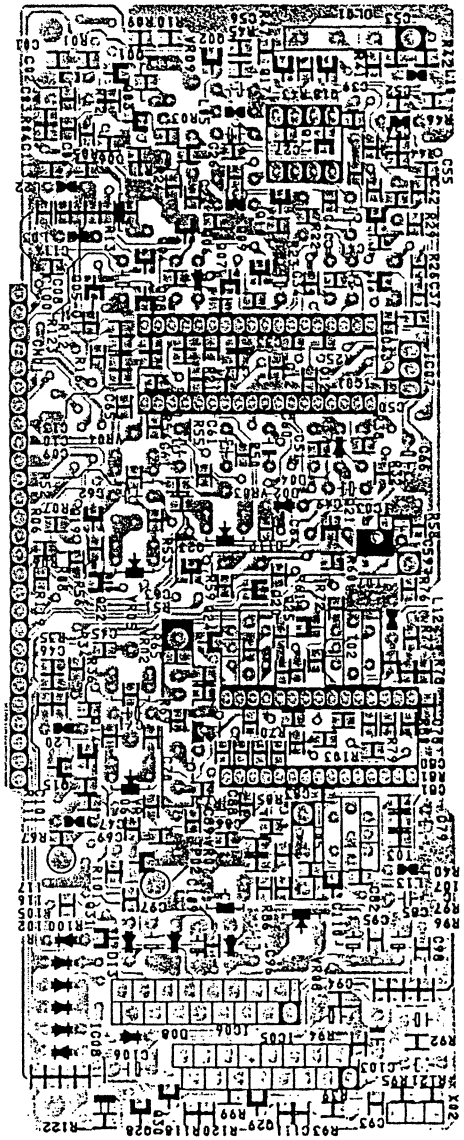

CANAL P.C.BOARD

TOP VIEW

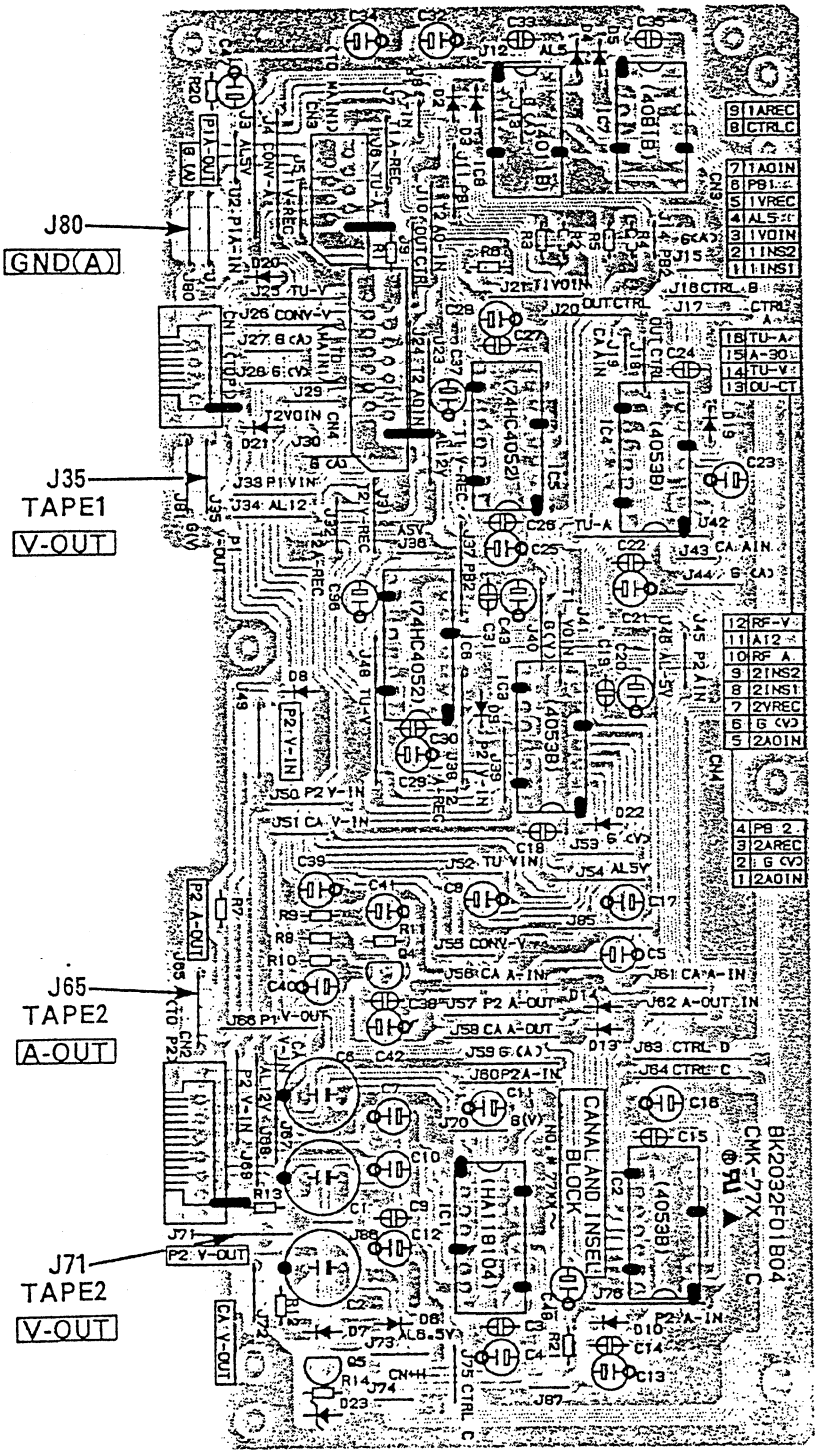

BOTTOM VIEW

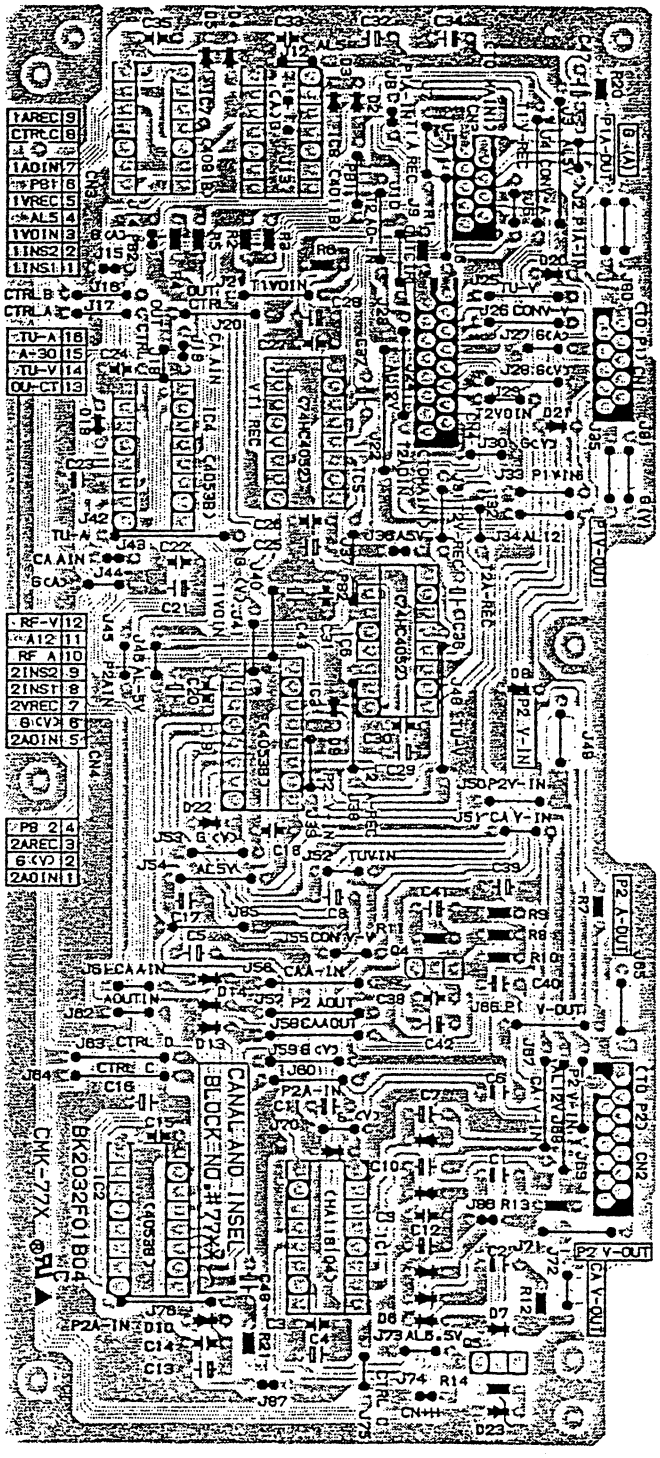

TAPE 1 JACK P.C.BOARD

TOP VIEW

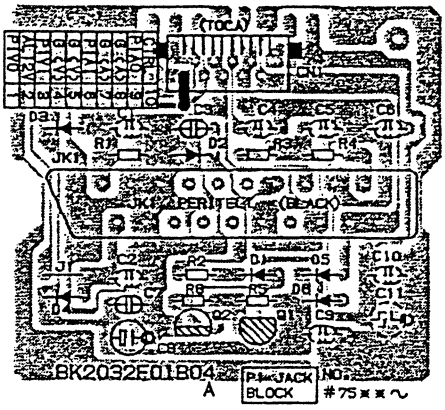

BOTTOM VIEW

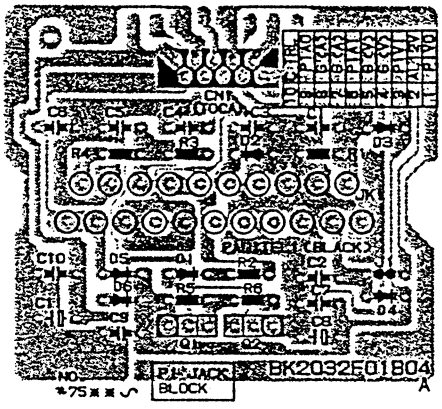

TAPE 2 JACK P.C.BOARD

TOP VIEW

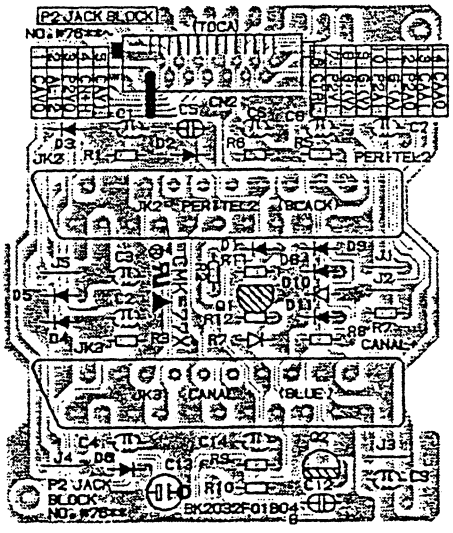

BOTTOM VIEW

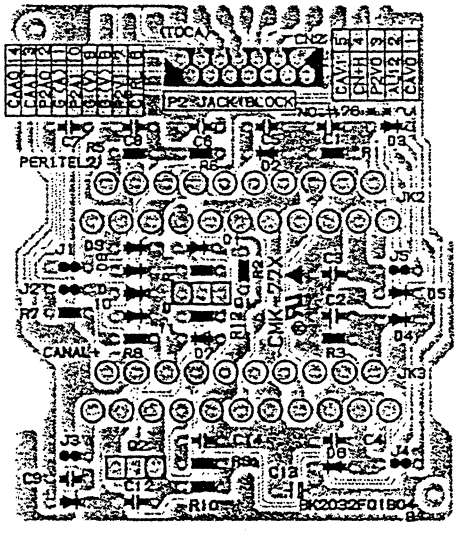

HEAD AMP SCHEMATIC DIAGRAM

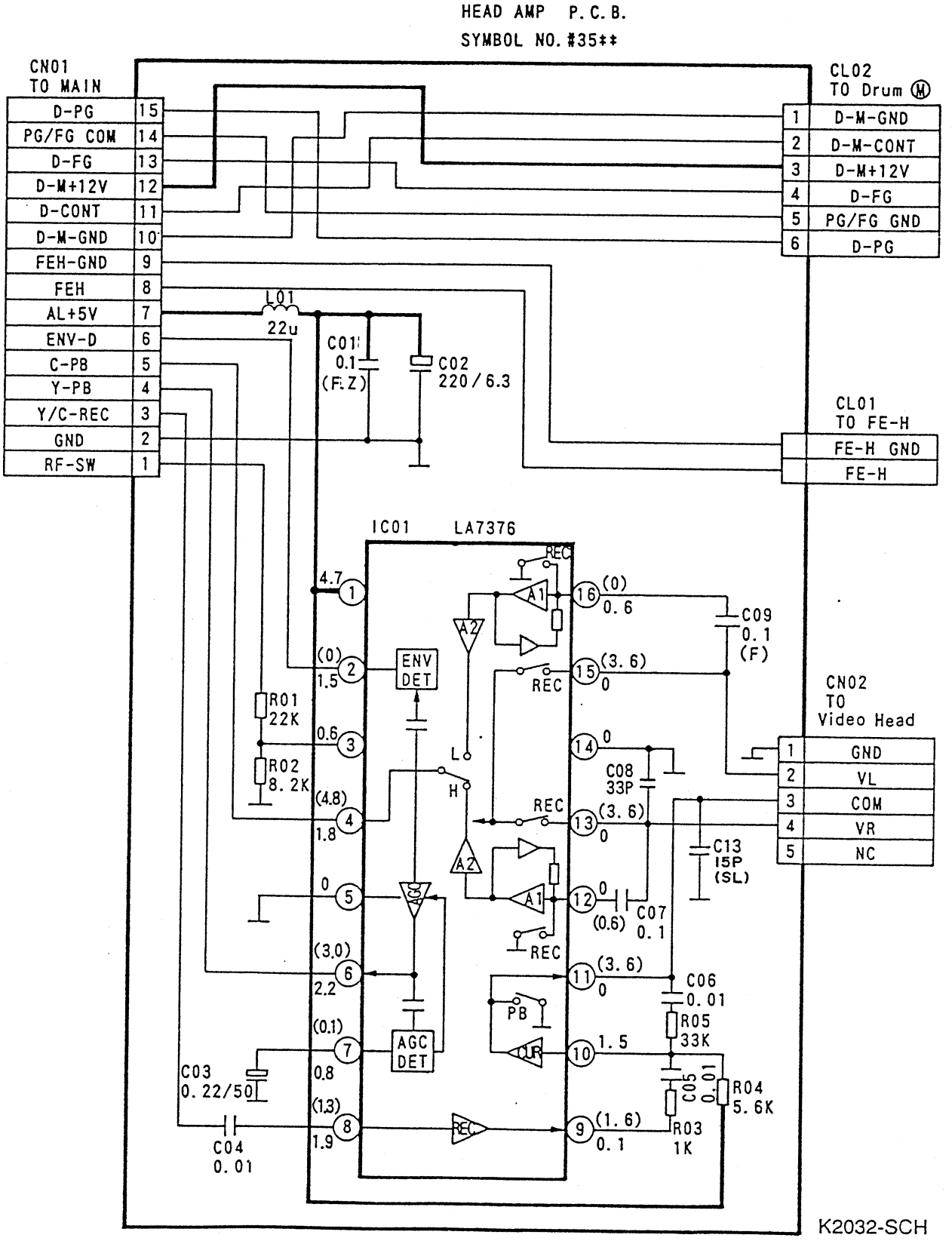

NORMARK:PLAY Mode
( ):REC Mode

HEAD AMP P.C.BOARD

TOP VIEW

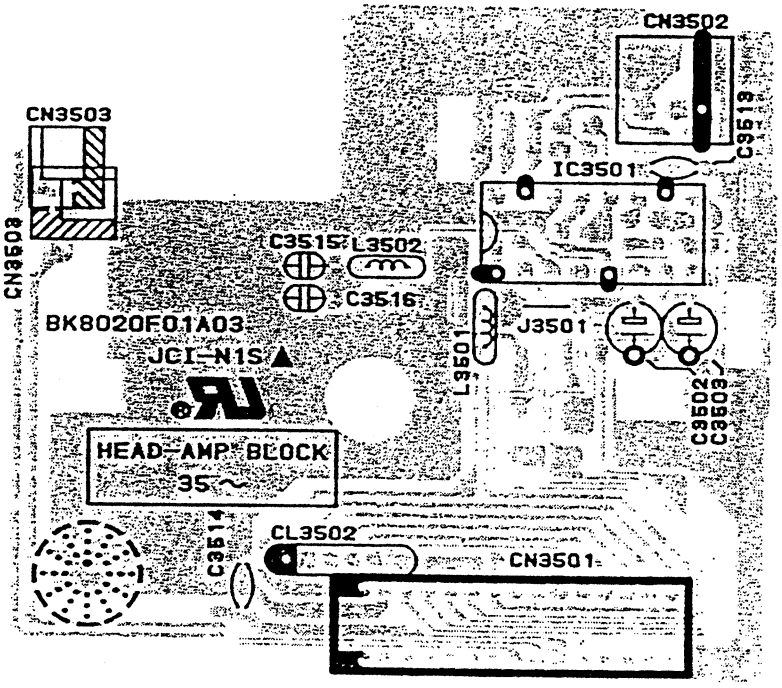

BOTTOM VIEW

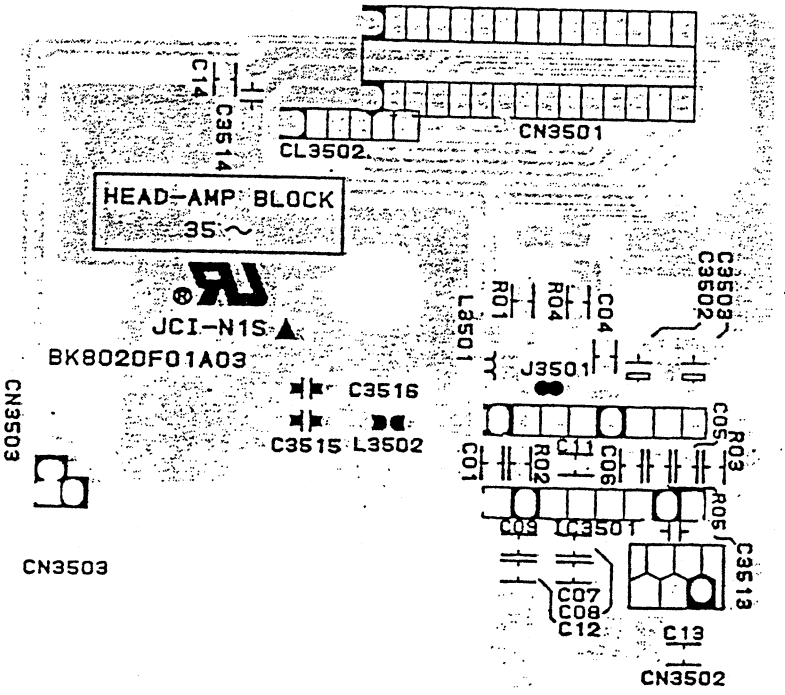

SIDE LOADING P.C.BOARD
TOP VIEW

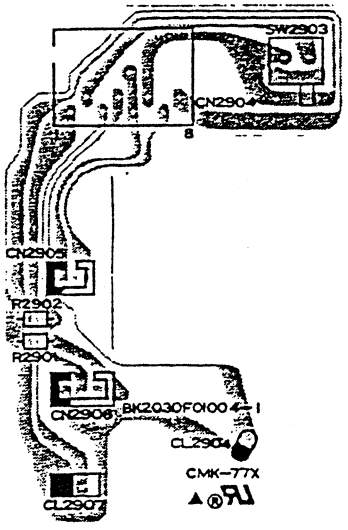

S/E SENSOR P.C.BOARD
TOP VIEW

CASSETTE DIRECTION SW
P.C.BOARD
TOP VIEW

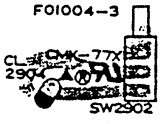

CASSETTE IN SW
P.C.BOARD
TOP VIEW

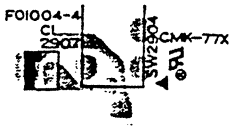

SIDE LOADING SCHEMATIC DIAGRAM

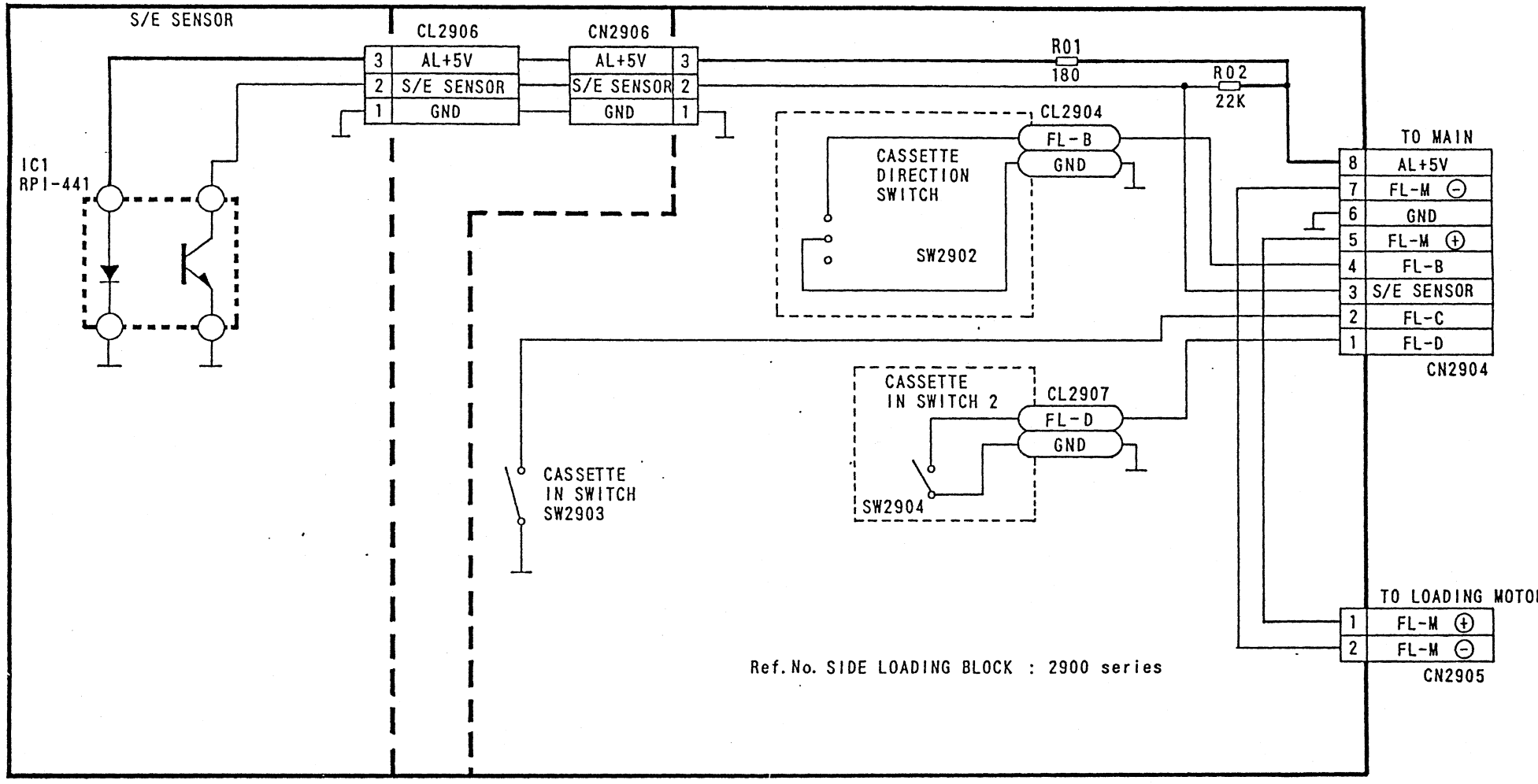

TIMER / CONTROL SCHEMATIC DIAGRAM

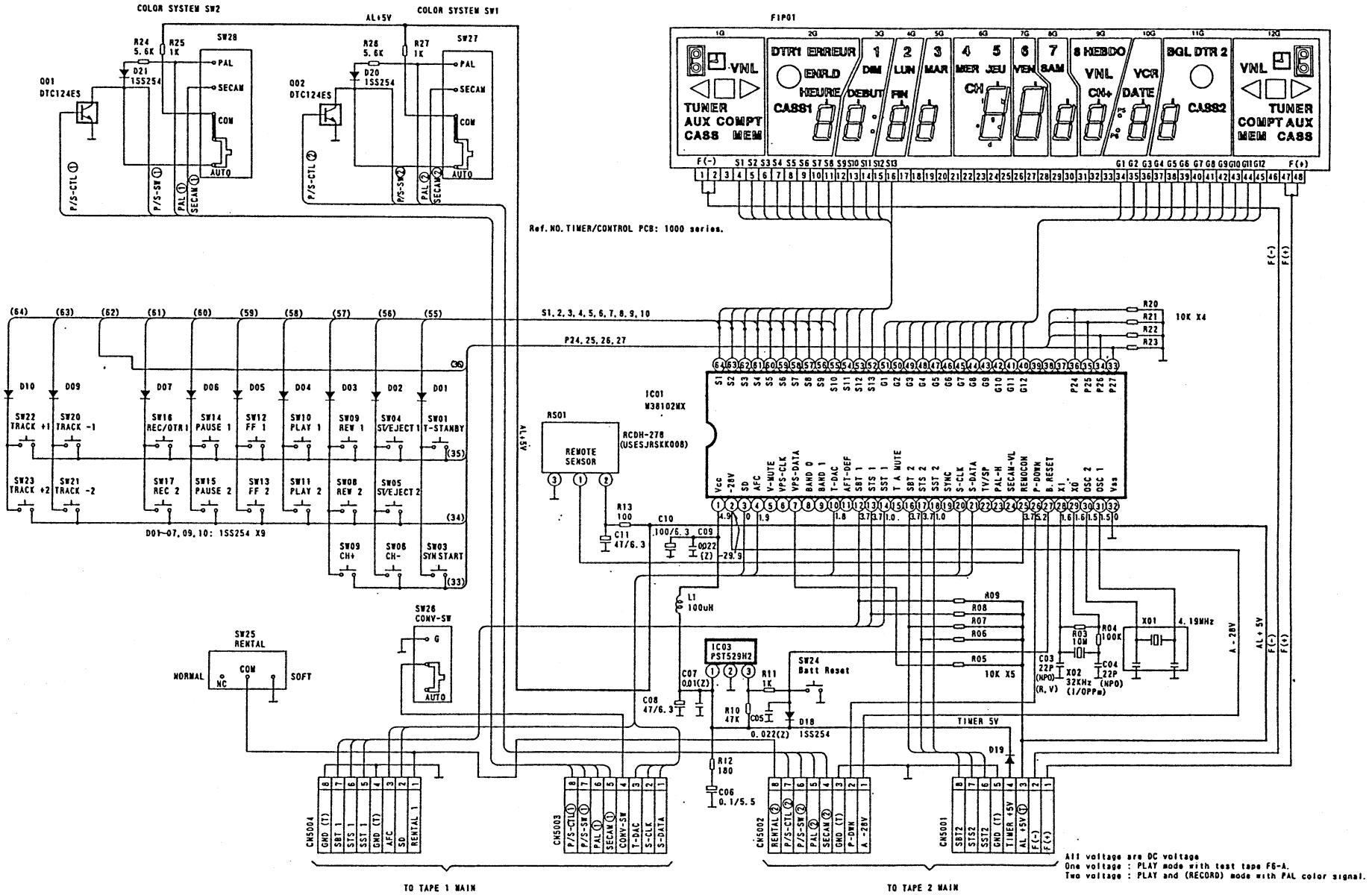

TIMER / CONTROL P.C.BOARD

TOP VIEW

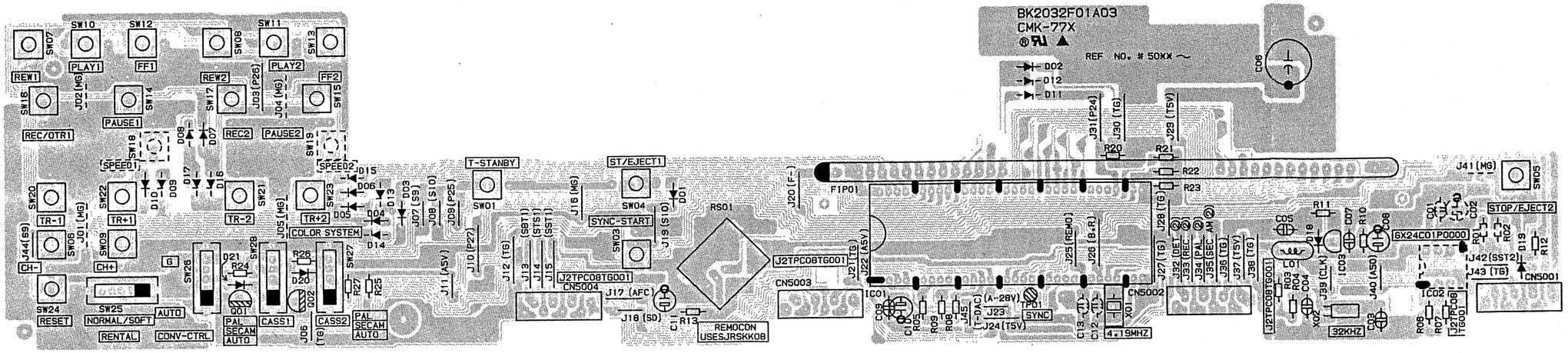

BOTTOM VIEW

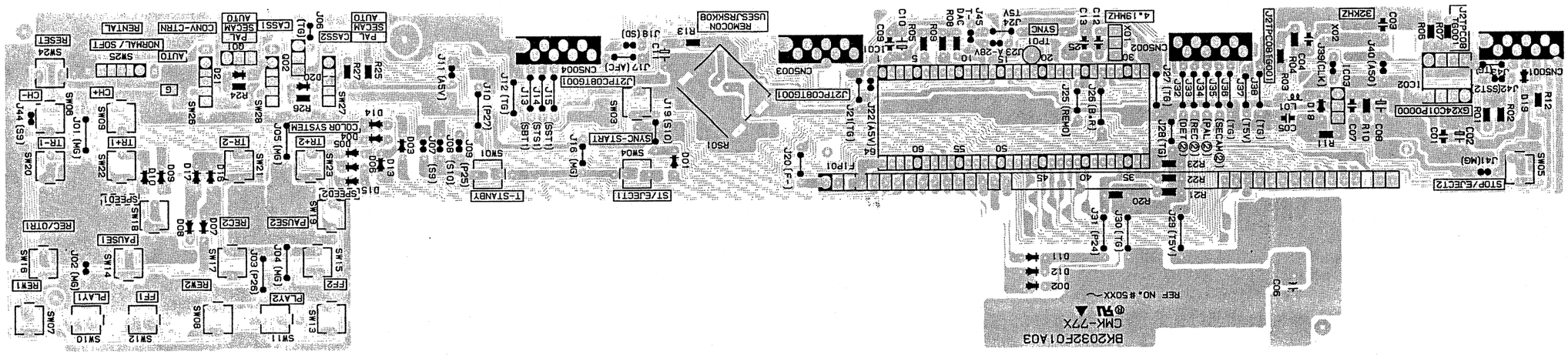

WAVEFORMS

WF1

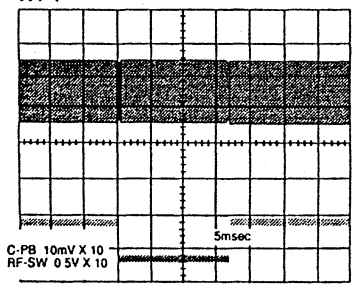

MODE: PLAY
TEST TAPE: F6-A

WF2

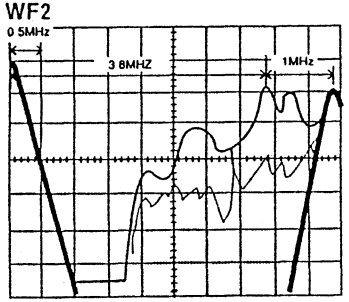

MODE: REC(SP)
Input: Color Bar Signal
With 100% White

WF3

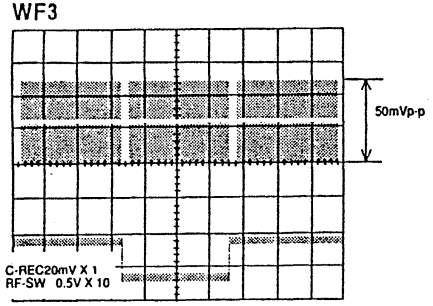

MODE: REC
Input: PAL Blue-Green Signal

WF4

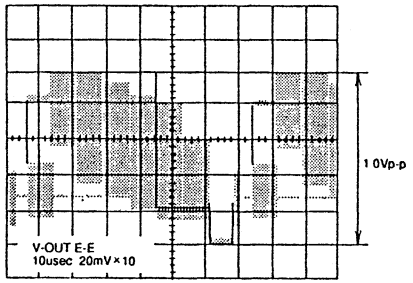

MODE: EE
Input: Color Bar Signal
With 100% White

WF5

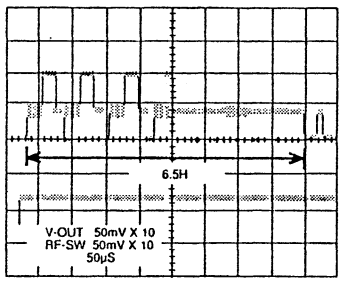

MODE: PLAY(SP)
Test Tape: F6-A

WF6

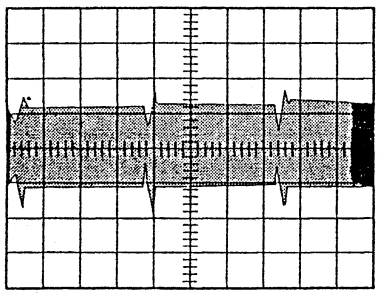

C-REC (SECAM)
2mVx10/div. 5mS/div.
SECAM Blue-Green Signal

WF7

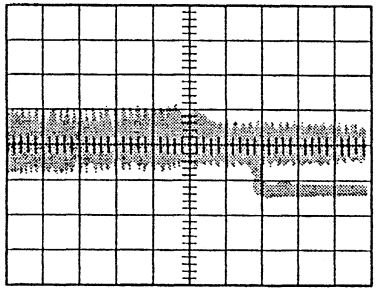

H.BLANKING
20mV/div. 1uS/div.
MODE: PLAY
TEST TAPE: F7-A

WF8

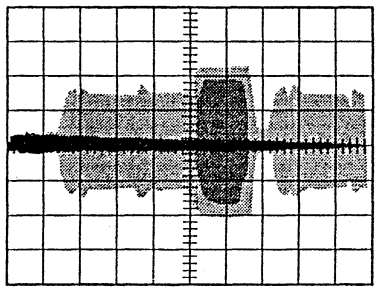

REC BELL
5mV/div. 10uS/div.
SECAM BEL Signal Input

WF9

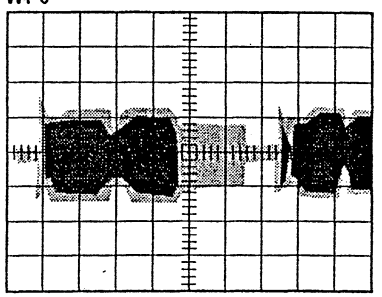

REC EQ
2mV/div. X10
10uS/div.
SECAM BELL Signal Input

WF10

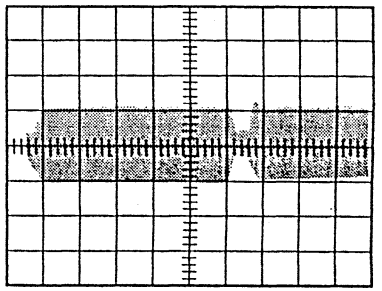

PB EQ
50mV/div. 10uS/div.
MODE: PLAY
TEST TAPE: F7-BELL

WIRING DIAGRAM

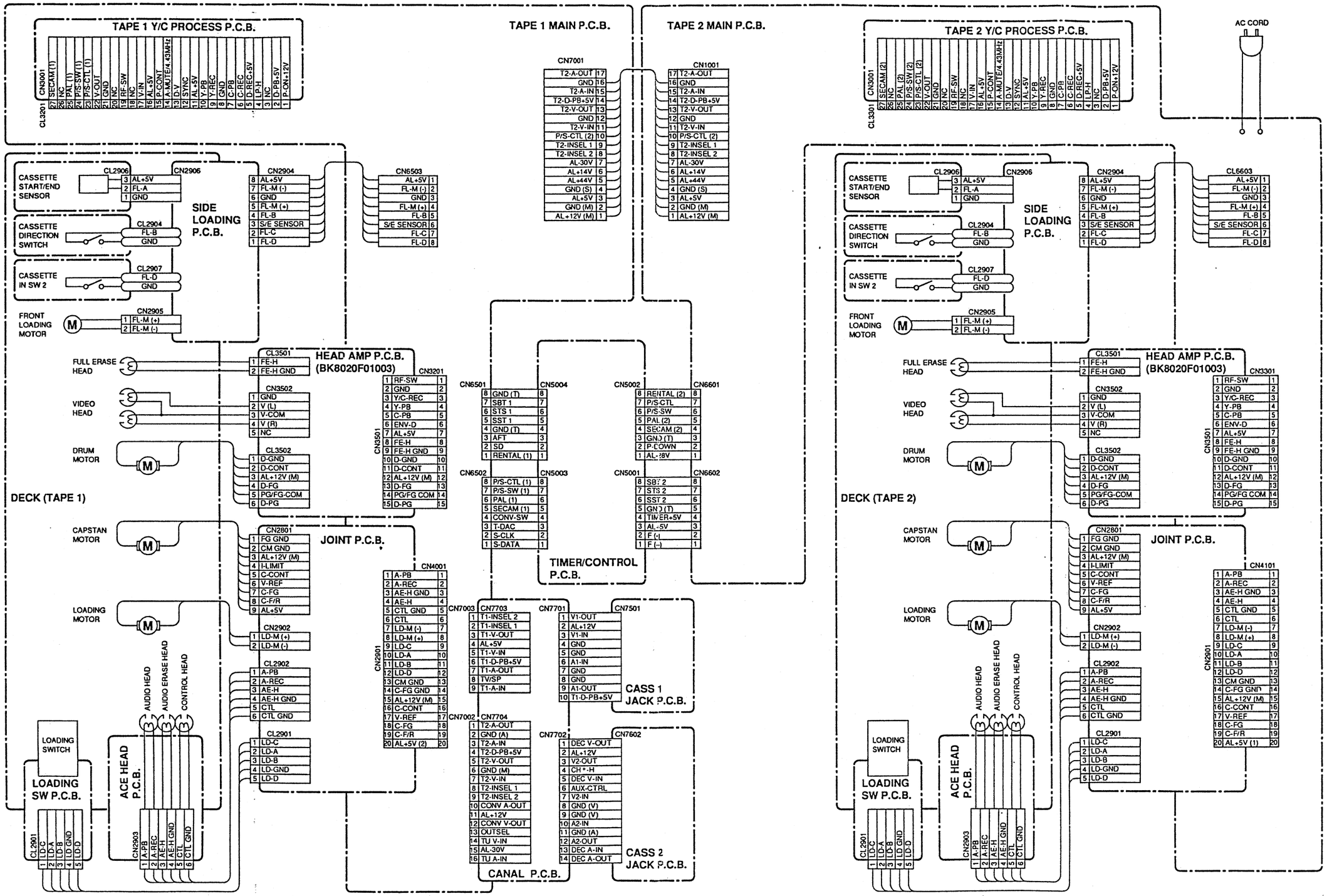

DD9901.

REF. NO.	DESCRIPTION.	PT. NO.
	CABINET PARTS LIST	
A1	FRONT ASSY	255243
	PLATE COUNTER	
	FRONT	
	PLATE FRONT	
	PLATE TIMER	
	BUTTON POWER	
	BUTTON STOP	
A2	DOOR TIMER	255242
	SPRING DOOR TIMER	255173
A3	DOOR CASSETTE 1	255199
A4	DOOR CASSETTE 2	255200
A5	FOOT	255175
A6	SPRING DOOR CASSETTE	255174
A9	SPACER A	
A10	SPACER B	
A15	CASE TOP	255100
A16	PANEL BOTTOM	255902
A17	JACK BOARD A	
A18	JACK BOARD	
A19	LABEL RATING	
B1	DECK MECHANISM N1106XA	
B2-1	CHASSIS	
B2-6	HOLDER REEL SENSOR	254929
B2-8	BUSH LED	
B2-9	HOLDER SENSOR	
B2-13	CASE SHIELD	
B2-14	SHEET INSULATOR	
B2-17	HOLDER CHASSIS	
	DECK MECHANICAL PARTS LIST	
B1	CHASSIS ASSY	
* B2	CYLINDER ASSY 2HD SP	255004
	UPPER DRUM ASSY	255158
	LOWER DRUM ASSY	255157
B3	LOADING MOTOR PREPRATION	254991
B4	MOTOR HOLDER CALKING ASSY	
B5	CASSETTEDRIVE LEVER ASSY	254978
B6	PINCH ROLLER ARM ASY	
B7	PINCH ARM ASSY	254966
B8	PULLEY ASSY	254989
B9	MOVING GUIDE S ASSY	254984
B10	MOVING GUIDE T ASSY	254985
B11	LOADING ARM A ASSY	254982
B12	LOADING ARM B ASSY	254983
B13	LOADING ARM M ASSY	254965
B14	PINCH ROLLER SP	254967
B15	LUMINAR WASHER 3.1X6X0.35	254976
B16	CAM	254960
B17	P.S.W. 1.7X3.2X0.5T	
B18	FRICTION GEAR SPRING	254975
B19	FRICTION GEAR	254974
B20	KICK ARM	255018
B21	LOADING BELT	254977
B22	P.S.W.A.	
B26	CLUTCH BLOCK ASSY	254987
B27	BAND BRAKE ASSY	254961
B28	MAIN BRAKE S ASSY	254980
B29	MAIN BRAKE T ASSY	254981
B30	T BRAKE ARM ASSY	255019
B31	AC HEAD ASSY	254988
B32	REEL BASE ASSY	254990
B34	MAIN LEVER ASSY	254964
B35	TAPE GUIDE ASSY	255020
B36	TENSION LEVER SP ASSY	254986
B37	CAPSTAN MOTOR F2QKB92	255003
B38	MODE CHANGE LEVER	254959
B39	M BRAKE (S) SPRING	254970
B40	M BRAKE (S) LEVER	255021
B41	S BRAKE ARM	255022
B42	M BRAKE T ARM SPRING	254973
B43	T BRAKE SPRING	254971
B44	HEAD ADJ SPRING	255023
B45	M LEVER SPRING	254968
B46	TAPE GUIDE ARM SPRING	254972
B47	TAPE GUIDE ARM ADJ SCREW	
B48	ADJUST NUT	
B49	BT DRIVE ARM	255024
B51	CHANGE ARM	254963
B52	BELT FAST WIND 2397	254956
B53	P.S.W 3.1X6X0.3T	
B54	EARTH BRUSH ASSY	
B55	C SLIDER L ASSY	254999
B56	C SLIDER R ASSY	255000
B57	CASSETTE GUIDE R ASSY	255025
B58	C.D. GEAR L ASSY	255026
B59	C.D. GEAR R ASSY	255001
B60	CASSETTE PLATE	254998
B61	FRONT GUIDE	254993
B62	GEAR CONNECT SHAFT	255027
B63	CASSETTE GUIDE L	254992
B64	INTERLOCKING GEAR R	254995
B65	FRONT DOOR OPENER	254994
B66	INTERLOCKING GEAR L	255028
B67	FRONT DOOR OPENER SPRING	254997
B68	DRIVING GEAR REINFORCEMENT	
B71	FL RACK	255029
B72	CASSETTE HOLDER UPPER PLATE	254996
B73	FE HEAD HVFHF0002A	255030
B74	LUMINENCE PRISM	254962
B75	REC ARM U5	255031
B76	REC ARM SPRING	254969
B77	PRISM R	255032
B78	PRISM L	255033
B79	EARTH SPRING	
B80	SPRING FOR PRESSING PACK	254975
B81	M LEVER HOLDER ASSY	255034
B82	KICK ARM HOLDER	255035
B83	RACK SPRING	
B84	PRESS FIT BUSH	
B99	REC SPRING	
B100	HOLDER SPRING	
	SIDE LOADING ASSY	255095
B201	ARM HL CONTROL	
B202	LEVER DOOR CONTROL	
B204	ROLLER GUIDE	
B205	PULLEY REDUCTION	
B206	GEAR REDUCTION	
B207	SPRING TORSION F	
B208	SPRING TORSION B	
B209	BELT SQUARE	255107
B210	CUT WASHER 2.6 0	
B211	CATCHER SLIDE ASSY	
B212	RUBBER CATCHER	
B213	SPRING CATCHER	
B214	COMUTATE MOTOR SUB ASSY CASSETTE	255106
B215	LEVER SYNCHRO F	
B216	LEVER SYNCHRO FS	
B217	SPRING LEVER SYNCHRO	
B218	SLEEVE LEVER	
B219	LEVER SYNCHRO BS	
B220	LEVER SYNCHRO B	
B221	GEAR BRACKET SUB ASSY	
B222	FRAME L	
B223	GUIDE CASSETTE	
B224	SPRING PLATE GIMBAL	
B225	SPRING TORSION GIMBAL	
B226	SHAFT GIMBAL	
B227	PR BRACKET ASSY	
B229	STANS F	
B230	MIRROR F	
B231	STAND B	
B232	MIRROR B	
B233	LEVER OPENER	
B234	GUIDE OPENER LEVER	
B235	CASSETTE HOLDER ASSY	
B236	LEVER SWITCH	
B237	SWITCH LEVER	
B238	SHAFT SWITCH	
B239	SWITCH LEVER SPRING	
B240	WASHER 1.6	
B250	CHASSIS ASSY	
B251	MODE CHANGE LEVER	
B253	MAIN BRACKET T ASSY	
B254	S BRAKE ARM 1409	
B255	T BRAKE ARM SPRING	
B256	M BRAKE (T) SPRING	
B257	HOLDER DECK A	
B258	HOLDER DECK B	
L1121	HEXAGON NUT M3	25495
	ICS	
IC1001	IC TLP621 PHOTO COUPLER	25332
IC1002	IC PROTECTOR UN10015 P-N38	25511
IC1502	IC AN78L05 REGULATOR	25000
IC2001,2101	IC MN6748FVDP SERVO	25510
IC2002,2102 2003	IC BA10324 OP AMP	24083
IC2075,2175	IC GC90000MB006 MICRO CON 8BIT	25510
IC2101	IC 4BIT MOCRO AT/M50925-486SP	25520
IC2901	IC RPI-441 PHOTO COUPLER	25522
IC3001	IC LA7390A VIDEO	25428
IC3002	IC LC8992	25000
IC3003	IC MM1031XM TI	25461
IC3004	IC BA7107S SECAM CHROMA	25066
IC3005,3006	IC LA7311	25461
IC3007	IC AN7805F NJM7805FA	15207
IC3008	IC TC4S66F-TE85R	25471
IC3501	IC LA7376 VIDEO HEAD AMP	25416
IC4001,4101	IC LA7282 AUDIO	25416
IC5001	IC MICRO CON 8BIT TI/M38102M5 MB007*	25526
IC5002	IC X24C01P	25401
IC5003,6506	IC PST529H-2 RESET	25000
IC6501,6601	IC SY M38002M2 MICRO CON 8BIT	25520
IC6502,6503	IC TA7291S	25306
IC6504,6604	IC BA10339	15239
IC6505,6506 6605	IC REEL SENSOR SG-211L	25491
IC6508	IC X24C01P	25401
IC7001	IC LA7210	15202
IC7002	IC LA7910	25020
IC7003	IC L5631	15240
IC7501,7502 7801-7803	IC BU4053B SWITCHING	15235
IC7701	IC HA118104 VIDEO SWITCH	2552
IC7702-7704*	IC BU4053B	1523
IC7705,7706*	IC BU4052B	2547
IC7707	IC HD14081BP	1503
IC7708	IC HD14011BP	2546
	TRANSISTORS	
Q1001	TR 2SC4204	2549
Q1002	TR 2SC4517	2549
Q1501	TR 2SD1581	2549
Q1502 1508 2005-2009 3202 3205,3206 4001	TR 2SC1740	5001

7015		
7704		
Q1503,	TR DTC124ES	152050
2003,2004		
5001		
5002		
7005,7008-		
7012,7014		
7502,7602		
Q1504,1505	TR 2SA933	150874
3201,7501		
7601		
Q7006,7007	TR DTA143XS	152406
Q1506	TR 2SD1384	152049
Q2001,2002	TR DTA124ES	254934
3030,3031		
7004		
7013		
Q	TR DTA144WS	151103
Q3001-3003	TR 2SC2412K T146	254714
3011,3013-		
3015,3017-		
3020		
Q3004,3006	TR 2SA1037 T146 / 2SA1179-5	253105
3010,3021		
Q3007,3023	TR DTA144WK	254713
Q3009,3022	TR DTC124EK	152050
3025		
Q3203	TR 2SC2058	151417
3204		
Q	TR 2SC1741S	152038
Q6502,6503	TR RPT-38PB3F PHOTO	254921
6602,6603		
Q1507,6501	TR 2SD400 F 2SC2060	254930
7705		
Q7003	TR 2SK128 FET	152040
Q7001	TR 2SD1468S	151722

DIODES

D1001	D S1WB60	253189
D1501-1503	D 1SS254	240540
1510-1513		
1515		
2001-2004		
3001-3004		
3006,3007		
3009,3010		
3012,3013		
3016-3018		
5001-5010		
5017-5021		
6501,7001		
7003		
7501-7506		
7601-7611		
7702-7711		
7713,7714		
7722		
D1003	D EG01	254919
D	DZ MTZJ5.6A	202190
D	D MA188	254932
D	D AK06 SCHOTTKY	255181
D1012	D RK33 SCHOTTKY	255180
D1013	D AK03	254944
D	D RK36 SCHOTTKY	255148
D1504	D 1SS254	240540
D	DZ MTZ11B	193654
D1508	D RL204	254592
D1509	DZ MTZ12B	240689
D7723	DZ MTZ6.8B	253277
D6502,6602	LED SIR-481ST3F	254920
D7502,7507	DZ MTZ8.2B	175764

COILS

L1001	LINE FILTER FKOB160MH13	254063
L1002	COIL LINE FILTER 47MH ELF-18D235F	255179
L1003	BEAD CORE HF70BB4.1X3X2	
L1004,1007	COIL 22UH	
L1005,1006	COIL 10UH	
L3008	COIL 10UH-K-26T	
L1502	COIL 22UH LEAD INDUCTOR	
L3001,3002	COIL 330UH-K-26T	
L3003	COIL 27UH-K-26T	
L3007	COIL 39UH-K-26T	
13011,3013	COIL 220UH-K-26T	
L3101	COIL 15UH-K-26T	
L3009,3020	COIL 56UH-K-26T	
L3022	COIL 68UH-K-26T	
L3201	COIL 82UH-K-26T	
L3014,3202	COIL 180UH-K-26T	
L3012,3206	COIL 22UH-K-26T	
3209		
L3006,3207	7001COIL 47UH-K-26T	
L3005 3210	COIL 100UH-K-26T	
3208		
L3210,3310	COIL 4.7UH-K-26T	
L3211,7001	COIL 100UH-K-5FT	
L4001,4101	COIL 18MH	253526
L5001	COIL 100UH-K-26T	
T3001,3003	coil REC EQUALISER	253527
T3002	COIL BELL FILTER NT-7045-1	250587
T3005	B.P.F. 4.3MHZ SBP-4606	254694
T3004	L C FILTER SFBBL0000C3D-4134-01	253288
T3007	COIL EQUALISER FILTER	253287
	SDL102421F6E-4240-01	
T4001,4101	COIL OSC AUDIR 113M686	152056

CRYSTALS

X2001,2101	CERAMIC RESONATOR 3.34MHZ	255176
X3001	CRYSTAL 4.433619MHZ	254066
X3002	CERAMIC RESONATOR 4.16MHZ	
X5001	CERLOCK 4.19MHZ	253566
X5002	CRYSTAL 32KHZ	254950
X6501	CERAMIC RESONATOR 4MHZ	241712
X7001	CERAMIC RESONATOR 500KHZ CSB500E	254069

SWITCHES

SW2901	MODE SWITCH HMW0420-510010	254957
SW2902	SLIDE SWITCH MSS-8B	255230
SW2903	PUSH SWITCH CASSETTE IN	255231
SW2904	LEAF SWITCH MLS-2S1 KB005	255201
SW5027,5028	SLIDE SWITCH SLD-13-497E 1832	255105
SW5001,5003	PUSH SWITCH EVQ-335 05R	254037
-5017,5020		
-5024		
SW5025,5026	SWITCH SLIDE 1C-2P	253279
SW6501,6601	PUSH SWITCH SPPB61	255151

VARIABLE RESISTORS

VR2001,4001	VRSF 100K OHM	254935
2101,4101		
VR3001,3002	VROT 4.7K OHM	254936
3003-3005		
VR3004	VROT 1K OHM	255186
VR3201,3301	VRSF 2.2K OHM	254336
3002,3006		
3008,3009		
3094		
VR3007	VROT METAL 50K OHM	
VR4002	VRSF 22K OHM	254594

MISCELLANEOUS

CN6501-6503	SCART SOCKET 21PIN	153030
JK7501-7603	SCART JACK	153030
7801		
TU7001	TUNER VIF BLOCK TPS7-BGL01	253281
CV7001	RF CONVERTOR MDF33-UM3815	253280
DL3001	COMB FILTER 4.433619MHZ	250084
CN6601,6602	FLOATING SOCKET CONNECTOR	
T1001 !	POWER TX SRW2929ED-544V119	255103
AC1001	AC CORD EP-631-E01	255140
FH1001,1002	FUSE HOLDER	
F1001 !	FUSE T1.60A/250V	272327
F7801	FFC CABLE 17P	255232
FP5001	FIP12RM6	255203
	FIP HOLDER L	
	FIP HOLDER R	
RS5001	REMOTE SENSOR UNIT SFN-R0011 /	254723
	REMOTE CONTROL UNIT HC-278N	
	REMOTE CONTROL HANDSET	255267
	RF CORD	253261
F7002	FFC CABLE 16P	
F7003	FFC CABLE 9P	
	USER INSTRUCTIONS	255209
	CARTON	255208
	SET POLY PACKING	

DESCRIPTION	REF. NO.	PT. NO.

RESISTORS

CHIP RESISTOR 1/10W

0 OHM	R1516,1517,2008,2053-2056
	2065,2066,3048,3210,3213
	4007,4021,4025,6529,6558
	6559,7039,7040
4.7 OHM	R4019
18 OHM	R3071
22 OHM	R2061
33 OHM	R3072
47 OHM	R4018,4026,4027
75 OHM	R3228
82 OHM	R4003
91 OHM	R3229,7001
100 OHM	R2030,3119,4001
150 OHM	R2027,3007
180 OHM	R6504
220 OHM	R2029,3226,3227
270 OHM	R3041
330 OHM	R3074
390 OHM	R3070,3218,3220
470 OHM	R3001,3012,3123,3212
560 OHM	R3005,3021
680 OHM	R3078,3079,3224
820 OHM	R3065,3111,3112,3203,3213
	7019
1K OHM	R2021,2022,2035,2043
	3023,3024
	3029,3037,3047,3059,3060
	3062,3067,3068,3069,3073
	3081,3085,3088,3093,3095
	3102,3103,3105,3110,3114
	3121,3201,3207,3221-3223
	4015,7002,7003,7018
1.2K OHM	R2048,7017
1.5K OHM	R3003,3014,3017,3036,3204
	3208,3216,3217,3219,6557
1.8K OHM	R2009,3009,3042,4012
2.2K OHM	R1510,2031,2038,2040,2044
	2045,3022,3028,3044,3057
	3058,3063,3100,3118,4007
	4013,6511,7008
2.7K OHM	R1506,3004,3013
	3019,3020
	3097,3101

	3066,7004,7007 7015	
3.9K OHM	R2057,3043,3050.3096, 3209,3225,4011	
4.7K OHM	R1502,1505,1519,2002,2004 2020,3015,3033,3045,3046 3076,3092,3098,3116,3117 3120	
5.6K OHM	R1504,1507,1508,2063 3053,3214 7005,7032	
6.8K OHM	R2046,4009 4017,7024,7029,7033,	
8.2K OHM	R3026,3052,3054 3064,3080,3206	
10K OHM	R2003,2012,2024,2025,2028 2032-2034,2049,2064,3002 3006-3008,3027,3031,3032 3035,3087,4005,6507,6508 7023,7030	
12K OHM	R2058,3010	
15K OHM	R7016,7028	
18K OHM	R3030	
22K OHM	R2014,3016,3038,3051,3099 4016,6503,6512-6528,6531 6536,7011,7013,7021	
27K OHM	R3055,4023	
33K OHM	R1501,1512-1514,3034,4002 7026,7027	
39K OHM	R2001	
47K OHM	R1503,1518,2013,2018,2023 2036,2037,2042,2050,3056 6530,6537,6556,7006,7012 7014,7025	
56K OHM	R2006,2007,2014,2015,2017 2026,2039,2047,7037	
100K OHM	R2005,7022	
150K OHM	R2010,2011,2019	
180K OHM	R2016	
220K OHM	R3061	
330K OHM	R3086,4006,7020	
470K OHM	R6505,6506	
1M OHM	R2062,3025,3039,3040 7009	
2.2M OHM	R4008	

CARBON RES 1/5W

10 OHM	R6510	
47 OHM	R6509	
68 OHM	R7707,7712	
82 OHM	R7501,7601,7603	
100 OHM	R5013	
180 OHM	R5012	
820 OHM	R7502,7602,7714	
1K OHM	R5011,5025,5027	
2K OHM	R3132	
2.2K OHM	R3131,7034,7035	
2.7K OHM	R7607,7608	
3.9K OHM	R7706	
4.7K OHM	R7711,	
5.6K OHM	R5024,5026	
10K OHM	R5005-5009,5020-5023,7503 7504,7506,7605,7606,7612 7710	
22K OHM	R7701	
33K OHM	R7703,7705	
47K OHM	R5010,7505,7611	
56K OHM	R7708,7709	
100K OHM	R5004,7609	
10M OHM	R5003	

CARBON 1/2W

1.2 OHM	R1025	
6.8 OHM	R1026	
1.5K OHM	R7003	

METAL OXIDE

1 OHM 1W	R1013	255176
2.7 OHM 1W	R6502	254940
3.3 OHM 1W	R6501	255168
82 OHM 1W	R1011	254941
330 OHM 1W	R3203,3303	255169
130K OHM 2W	R1008	255206
240K OHM 1W	R1009	255109
270K OHM 1W	R1004	254923
330K OHM 1W	R1003	254924

WIRE WOUND

8.2 OHM 3W	R1002	255207

FUSE

10 OHM 1/2W	R1023,1024	254949

CAPACITORS
CERAMIC CHIP

6PF 50V	C3024	
12PF	C3069	
18PF	C3017,3214,3216	
22PF 50V	C3039,3113,3218	
27PF 50V	C3219	
33PF	C3010,3013	
39PF 50V	C3026,3070,3201,3217	
47PF	C3008,3100,3101	
56PF 50V	C3076	
68PF 50V	C3003,3202	
82PF 50V	C3023	
100PF 50V	C2012,2013,3054,3075,3080	
150PF 50V	C3019,3203	
180PF 50V	C3009	
220PF 50V	C3002,3004,3041,3073,3086 4020	
270PF 50V	C7016	
330PF	C7013	
390PF 50V	C3015	
0.001UF 50V	C4001,4010,6507,6508,7012	
0.0022UF 50V	C3111	
0.0047UF 50V	C2017,2018,4033	
0.01UF 25V	C2026,3001,3031,3033,3040 3042,3043,3052,3053,3055 3056,3063,3065,3072,3075 3081,3083,3089,3092,3093 3107,4006,4013,4016,4017	
0.022UF	C2002,3050,3071,3215	
0.022UF 50V	C2009,2021,2032,2036,2038 2048,3006,3027,3038,3044- 3047,3077,3078,3088,3090 3094,3109,3114,3224,3233 4025,6501,6517,6518,6521	
0.047UF 25V	C2033,3012,3034,3037,3058 3207,3220,3308	
0.1UF 16V	C2030,4026,4027	
0.1UF 25V	C3082	

CERAMIC

22PF	C5004	
33pF	C5003	
270PF	C3085	
1000PF !	C1002	255171
4700PF !	C1003,1004,1006,1007	255170
0.01UF	C7007,7507,7612,7703,7714 7722,7733,7735,7738,	
0.022UF	C5005,5009,7503,7605,7709 7715,7718,7719,7724,7726 7727,7730,7731	
0.1UF 50V	C5006,6503,6505,7002	

SEMICONDUCTOR CAPS

0.01UF 25V	C2005,2007,2010	
0.022UF 25V	C7504	

ELECTROLYTIC

0.1UF 50V	C2015,2041 3051	
0.22UF 50V	C2003,2006	
0.47UF 50V	C1501,7003,7014,7017	
1UF 50V	C2029,3014,3029 3032,3035,3036,3048 3064,7015,7041	
2.2UF 50V	C2023,3095,3104	
3.3UF 25V	C3096,3097,3105,3106	
4.7UF 6.3V	C3067	
4.7UF 25V	C3030,3049,3061,3062,3066 4014,7004,7704,7705,7707 7708,7710,7711,	
10UF 16V	C1502-1504,2022,2024,2025 2027,2028,3021,3022,3028, 3057,4011,6504,6506,7036 7508,7613,7713,7716,7720 7721,7723,7728,7732,7734 7736,7737,7739-7743	
22UF 16V	C4003,4008,4015,4018	
47UF 6.3V	C2019,2020,2037,2039,3005 3059,3060,3079,3087,3102 3108,5008,5011,6502,6515 7717,7725,7729	
47UF 10V	C7712	
47UF 16V	C1508,1520,7011,	
47UF 35V	C7023	
100UF 6.3V	C2004,2011,3208,3225,3226 5010	
100UF 16V	C7009,7034,7044	
220UF 6.3V	C3103,3110	
330UF 6.3V	C6509	
470UF 6.3V	C7001	
1000UF 6.3V	C3223,7701,7702,7706	

MYLAR

0.033UF 50V	C2014,2016	
0.047UF 100V	C4019	
0.15UF 50V	C7020,7021	
0.22UF 50V	C70197025	

METAL FILM

0.01UF 630V	C1012	
0.1UF 250V	C1001	

EXPLODED VIEW

CABINET ECPLODED VIEW

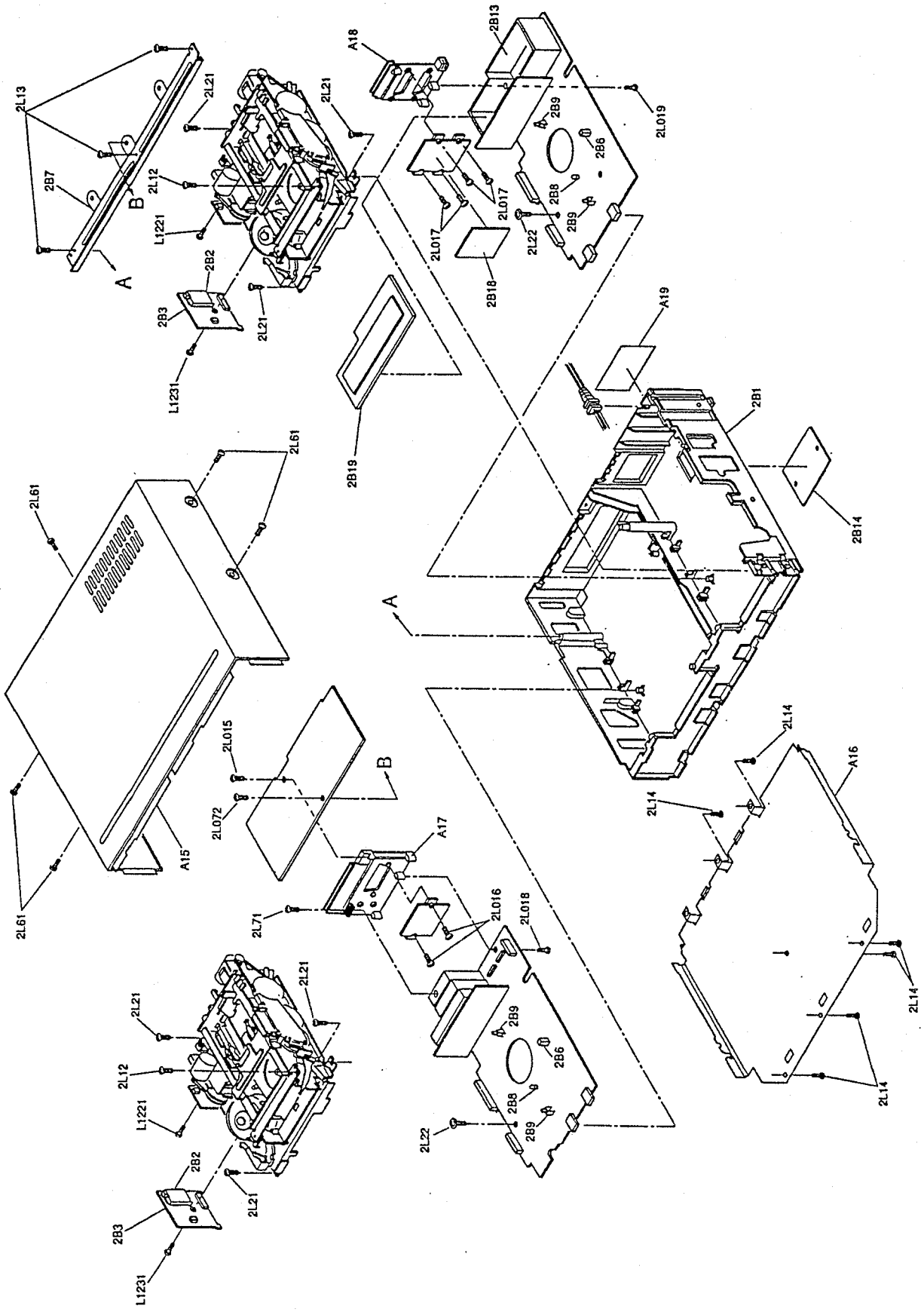

FRONT EXPLODED VIEW

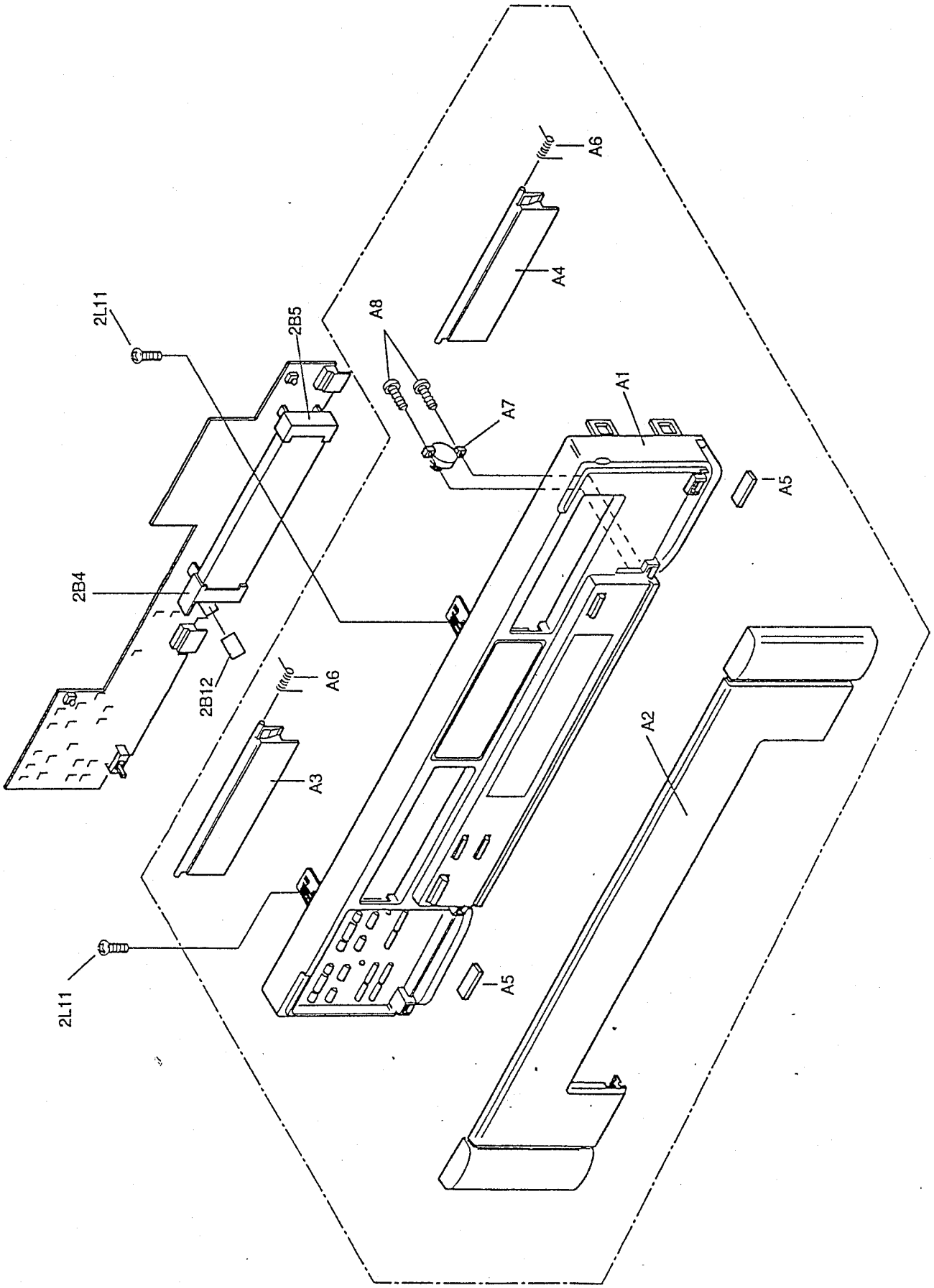

IC PIN FUNCTION DESCRIPTION

IC6501, IC6601 (QSMQA0SMB008)
SYSTEM CONTROL

Pin No.	IN/OUT	Signal Name	Function	Active Level
1	IN	VCC	+5V	—
2	IN	SENS-INH	Start/End/Reel Sensor INH	L
3	IN	TAPE1/TAPE2	Syscon TAPE1/2 Switching Pulse	H/L
4	OUT	LED-P	Pulse Output Signal for Sensor (for ST/END Sensor)	H/L
5	IN	ATR ON/OFF	ATR On at "L", ATR Off at "H"	H/L
6	IN	$\overline{\text{A•TR}}$	"L" at Auto Tracking Function	H/L
7	IN	ST-S	Tape Start Position Detector	L
8	IN	END-S	Tape End Position Detector	L
9	IN	REEL-P	Take Up Reel Rotation Signal Input	H/L
10	IN	DEW	Dew Sensor	L
11	IN	P-SFT	Power Voltage Abnormal Detect="L" when Power On	L
12	IN	FL-C	Cassette Loading Position Detector	H/L
13	IN	FL-A	Cassette Loading Position Detector	H/L
14	IN	FL-B	Cassette Incorrect Insertion Detector Switch	H/L
15	IN	FL-D	Cassette Loading Position Detector	H/L
16	IN	LD-A	Tape Loading Position Detector	H/L
17	IN	LD-B	Tape Loading Position Detector	H/L
18	IN	LD-C	Tape Loading Position Detector	H/L
19	IN	LD-D	Tape Loading Position Detector	H/L
20	IN	RF-SW	Head Switching Pulse	H/L
21	IN/OUT	SBT	Serial Buffer Timing/Input/Output Signal of Serial Transfer Timing Pulse with Timer IC	—
22	OUT	SST	Serial Data from System Control to Timer	—
23	IN	STS	Serial Data from Timer to System Control	—
24	IN	R-SFT	Record Safety Tab Detect	L
25	IN	V-SYNC 2	Head Switching Pulse	H/L
26	IN	VSS	GND	—
27	IN	$\overline{\text{RESET}}$	Reset at Reset Signal Input "L", Normal at "H"	L
28	IN	TR•PRESET	TR•PRESET Value Beginning Set	H/L
29	OUT	TR A/M SW	Tracking of Auto/Manual Switching Pulse	H/L
30	IN	OSC IN	Cristal Oscillator (4MHz Input)	—
31	OUT	OSC OUT	Cristal Oscillator (4MHz Output)	—
32	—	VSS	GND	—
33	OUT	V-MUTE	Video Mute Signal (Not used)	H
34	OUT	OUT-A-MUTE	Out Put Select Audio Mute Signal (Not used)	H
35	OUT	$\overline{\text{D-PB}}$	Video/Audio Playback Instruction Signal	L
36	OUT	D-REC	Video/Audio Recording Instruction Signal	H
37	OUT	$\overline{\text{P-ON}}$	Power-On Instruction Signal	L
38	OUT	FL-REV	Cassette Loading Motor Control Signal	H
39	OUT	FL-FWD	Cassette Loading Motor Control Signal	H
40	OUT	TV/VCR	RF Conv. On/Off Signal	H/L
41	OUT	BAND 0	Tuner Band Set Signal 0	H/L
42	OUT	BAND 1	Tuner Band Set Signal 1	H/L

Pin No.	IN/OUT	Signal Name	Function	Active Level
43	OUT	AFT DEF	Auto Frequency Control On/Off Signal	H
44	OUT	TV/SP	Output for Channel Adaptor Switching	H/L
45	OUT	PAL-H	PAL/SECAM Switching Pulse	H/L
46	OUT	SECAM V_L	Output "H" when Receiving VL Band in SECAM Mode	H
47	OUT	VPS CHK	Output "H" when Checking VPS in Timer REC Stand By (Not used)	H
48	IN	AUTO EJ INH	"H" at Auto Eject Inhibition Function	H/L
49	OUT	DM-ON	Drum Rotation Control Signal Output (Rotation="H")	H
50	OUT	C-DRIVE	Capstan Motor Drive Signal (Rotation=Open/Stop="L")	H
51	OUT	C-F/R	Capstan Motor FWD/REV Control Signal (Forward="L", Reverse="H")	H/L
52	OUT	PAUSE	Pause Control	H
53	IN	LP/EP-H	Tape Speed LP or EP Mode="H" Input	H/L
54	IN	EP-H	Tape Speed EP Mode="H" Input	H/L
55	OUT	S-DATA	Servo IC Data	—
56	OUT	S-CLK	Servo IC Timing Clock	—
57	OUT	LD-REV	Loading Motor Reverse Control Output (Reverse/Stop="H")	H
58	OUT	LD-FWD	Loading Motor Forward Control Output (Forward/Stop="H")	H
59	OUT	TR-MM	Tracking Mono Multi Output	L
60	OUT	SYS-A-MUTE	System Control Audio Mute Signal	H
61	OUT	TU-A-MUTE	Tuner Audio Mute Signal	H
62	OUT	INSEL 2	Input Selector Control 2	H/L
63	OUT	INSEL 1	Input Selector Control 1	H/L
64	OUT	OUTSEL	Output Selector Control	H/L

IC5001 (QSMQB0SMB007)
TIMER

Pin No.	IN/OUT	Signal Name	Function	Active Level
1	IN	VCC	+5V	—
2	IN	-28V	-28V	—
3	IN	SD	Tuner Video Signal Sync. Signal Input	L
4	IN	AFT	Tuner AFT Voltage Input	—
5	OUT	V-MUTE	Video Mute Signal Output	H
6	OUT	VPS-CLK	VPS Interface Clock	—
7	IN/OUT	VPS-DATA	VPS Interface Data	—
8	OUT	BAND 0	Tuner Band Set Signal 0 (Not used)	H/L
9	OUT	BAND 1	Tuner Band Set Signal 1 (Not used)	H/L
10	OUT	T-DAC	Tuner Tuning Voltage Control Signal	—
11	OUT	AFT-DEF	Auto Frequecy Control On/Off Signal (Not used)	H
12	IN/OUT	SBT 1	Serial Buffer Timing Signal	—
13	OUT	STS 1	Serial Data from Timer IC to System Control IC	—
14	IN	SST 1	Serial Data from System Control IC to Timer IC	—
15	OUT	T-A-MUTE	Tuner Audio Mute Signal (Not used)	H
16	IN/OUT	SBT 2	Serial Buffer Timing Signal	—
17	OUT	STS 2	Serial Data from Timer IC to System Control IC	—
18	IN	SST 2	Serial Data from System Control IC to Timer IC	—
19	OUT	SYNC	32KHz Test	—
20	OUT	S-CLK	Memory IC Timing Clock	—
21	IN/OUT	S-DATA	Memory IC Data	—
22	OUT	TV/SP	CANAL TV/VCR Switching Pulse (Not used)	H/L
23	OUT	PAL-H	PAL/SECAM Switching Pulse (Not used)	H/L
24	OUT	SECAM V_L	VL SECAM Switching Pulse (Not used)	H/L
25	IN	REMOCON	Remote Control Serial Input	—
26	IN	P-DWN	Power Down Input Signal	L
27	IN	RESET	System Intialize Signal	L
28	IN	OSC 1 IN	Cristal Oscillator (32KHz)	—
29	OUT	OSC 1 OUT	Cristal Oscillator (32KHz)	—
30	IN	OSC 2 IN	Cristal Oscillator (4.19MHz)	—
31	OUT	OSC 2 OUT	Cristal Oscillator (4.19MHz)	—
32	—	VSS	GND	—
33	IN	KEY-DATA 4	Key Scan Signal Input	—
34	IN	KEY-DATA 3	Key Scan Signal Input	—
35	IN	KEY-DATA 2	Key Scan Signal Input	—
36	IN	KEY-DATA 1	Key Scan Signal Input	—
37	OUT	A.CONT 2	Audio Control Signal 2 (Not Used)	H/L
38	OUT	A.CONT 2	Audio Control Signal 1 (Not Used)	H/L
39	—	—	—	—
40	OUT	G12	Display Digit Output	H/VPP
41	OUT	G11	Display Digit Output	H/VPP
42	OUT	G10	Display Digit Output	H/VPP
43	OUT	G9	Display Digit Output	H/VPP
44	OUT	G8	Display Digit Output	H/VPP
45	OUT	G7	Display Digit Output	H/VPP
46	OUT	G6	Display Digit Output	H/VPP

Pin No.	IN/OUT	Signal Name	Function	Active Level
47	OUT	G5	Display Digit Output	H/VPP
48	OUT	G4	Display Digit Output	H/VPP
49	OUT	G3	Display Digit Output	H/VPP
50	OUT	G2	Display Digit Output	H/VPP
51	OUT	G1	Display Digit Output	H/VPP
52	OUT	S13	Display Segment Output	H/VPP
53	OUT	S12	Display Segment Output	H/VPP
54	OUT	S11	Display Segment Output	H/VPP
55	OUT	S10	Display Segment Output/Key Scan Signal Output	H/VPP
56	OUT	S9	Display Segment Output/Key Scan Signal Output	H/VPP
57	OUT	S8	Display Segment Output/Key Scan Signal Output	H/VPP
58	OUT	S7	Display Segment Output/Key Scan Signal Output	H/VPP
59	OUT	S6	Display Segment Output/Key Scan Signal Output	H/VPP
60	OUT	S5	Display Segment Output/Key Scan Signal Output	H/VPP
61	OUT	S4	Display Segment Output/Key Scan Signal Output	H/VPP
62	OUT	S3	Display Segment Output/Key Scan Signal Output	H/VPP
63	OUT	S2	Display Segment Output/Key Scan Signal Output	H/VPP
64	OUT	S1	Display Segment Output/Key Scan Signal Output	H/VPP

LEAD IDENTIFICATIONS

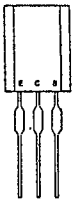

DTA124
DTA143
DTC124
A1346

2SA608
2SA933
2SC536
2SC1740
2SC2058
2SC3400
2SD400
2SC4204
2SD1468

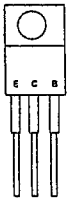

2SC3979
2SC4517
2SC3866

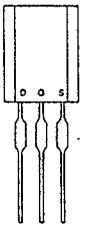

2SK128

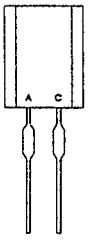

L5631

A: Anode
C: Cathode

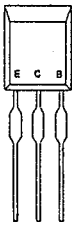

2SD1581

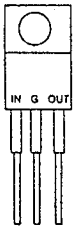

AN7812
NJM7812

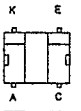

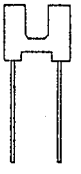

SG-211

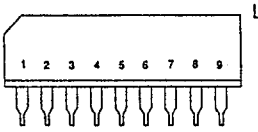

LA7910
LA7956

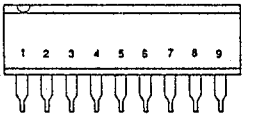

TA7291S

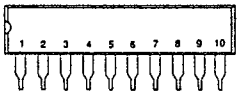

LA7210

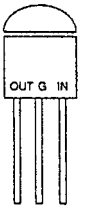

AN78L05
NJM78L05A

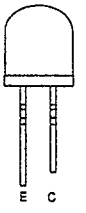

RPT-38PB3F

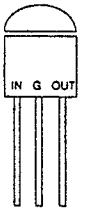

T529D

STANDARD MAINTENANCE

SERVICE SCHEDULE OF COMPONENTS

O:Check ●:Change

Deck		Periodic Service Schedule			
Ref. No.	Parts Name	1,000 H	2,000 H	3,000 H	4,000 H
B2	Cylinder Ass'y	O	●	O	●
B3	Loading Motor			●	
B7	Pinch Roller Arm Ass'y		●		●
B8	Pulley Sub Ass'y		●		●
B21	Belt LDG		●		●
B26	Clutch Block Assembly		●		●
B27	Band Break Ass'y		●		●
B28	Main Break S Ass'y		●		●
B29	Main Break T Ass'y		●		●
B30	T Break Arm Ass'y		●		●
B31	AC Head Ass'y			●	
B32, B33	Reel Assembly			●	
B37	Capstan Motor		●		●
B52	Belt FWD		●		●
B54	Drum Ground			●	
* B73	Full Erase Head			●	
☆ B86	F Break Ass'y		●		●

Note:

1. Clean all parts for the tape transport (Upper Drum with video head / Pinch Roller / Audio Control Head / Full Erase Head) using 91% Isoprophyl Alcohol.
2. After cleaning up the parts, perform all DECK ADJUSTMENTS.
3. All Reference Numbers listed above refer to parts shown on Deck Exploded View .
4. Parts marked ☆ are used in 4 head model only.
5. Parts marked * is used in Rec / Play model only.

CLEANING

1. Cleaning of Video Head

Use a Head Cleaning Stick or Chamois Skin

Procedure

1. Remove the top cabinet.
2. Put on a glove (thin type) to avoid touching the upper drum and lower drum with bare hands.
3. Put a few drops of alcohol on the Head Cleaning Stick, and by slightly placing it against the head tip, allow the upper drum to turn to the right and left.

NOTE:

1. The video head is very hard material, but since it is very thin, avoid cleaning it vertically.
2. Wait for the cleaned part to dry out before operating the unit.
3. Do not reuse the stained Head Cleaning Stick.

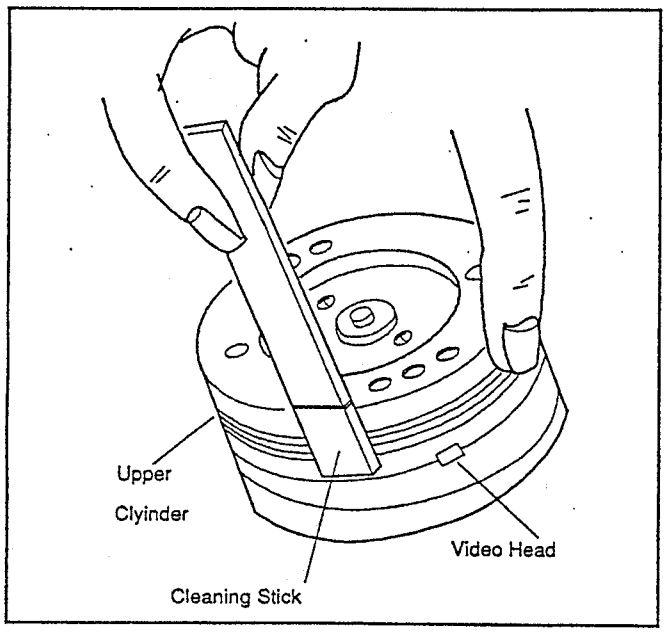

2. Cleaning of Audio Control Head

Use a cotton swab (Q-Tip)

Procedure

1. Remove the top cabinet.
2. Put a few drops of alcohol on the cotton swab, and clean up the audio control head, being careful not to damage the upper drum and other tape running parts.

NOTE:

1. Avoid cleaning audio control head vertically.
2. Wait for the cleaned part to dry out, before operating the unit, or damage will occur.

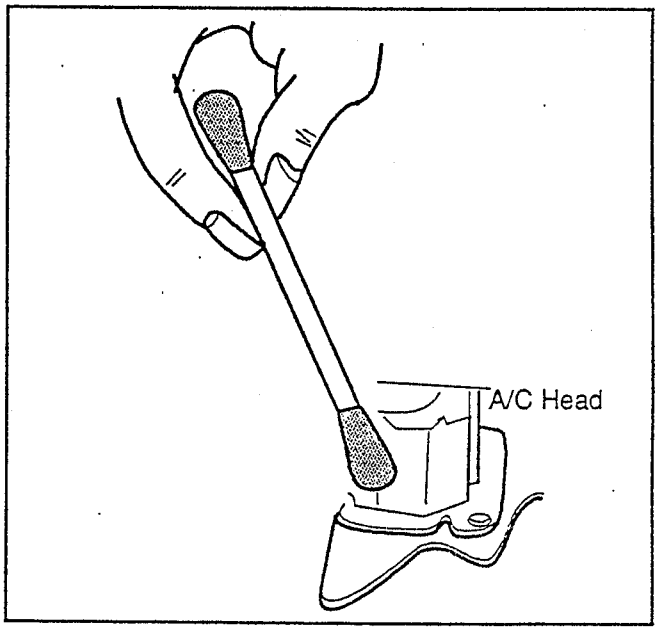

SERVICE FIXTURES AND TOOLS

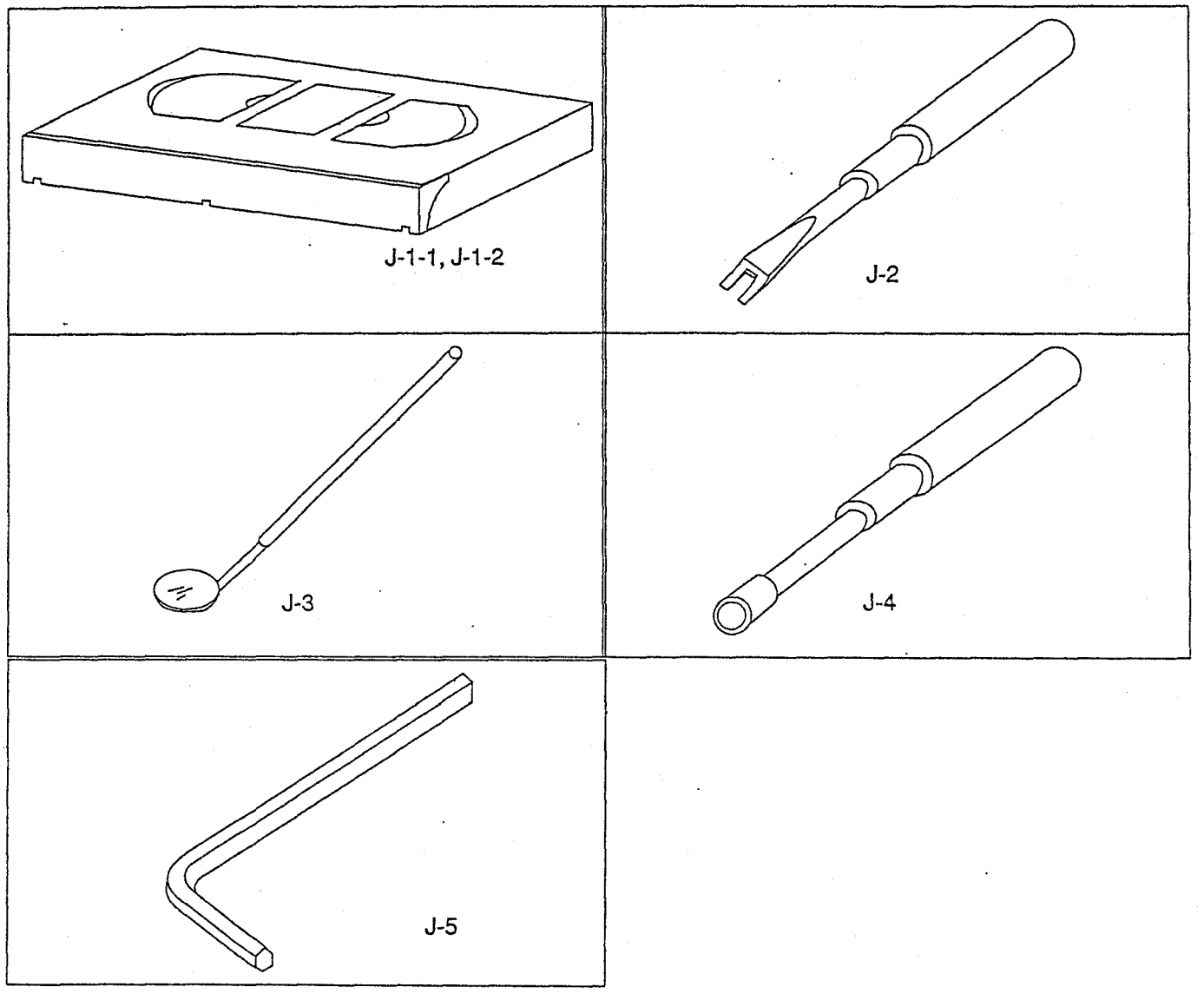

Ref. No	Name	Adjustment
J-1-1	Alignment Tape (F6-A)	Head Adjustment of Audio Control Head
J-1-2	Alignment Tape (F6-N): 2 Head Model	Azimuth Adjustment of Audio Control Head / X Value
	Alignment Tape (F6-NS): 4 Head Model	/ Confirmation / Adjustment of Envelope Waveform
	Alignment Tape (F6-NF): 4 Head model	
J-2	Special Driver (FSJ-0001)	Tape Guide Height
J-3	Mirror (FSJ-0004)	Tape Transportation Check
J-4	Box Driver, Mx3 (FSJ-0005)	Guide Pole / A/C Head Height
J-5	Hexagon Wrench (0.9mm)(FSJ-0002)	Confirmation and Adjustment of Tape Running
	Hexagon Wrench (1.5mm)(FSJ-0003)	Confirmation and Adjustment of Tape Running

MECHANICAL ALIGNMENT PROCEDURES

Service Information

A. Method for Manual Tape Loading/Unloading of VCR.
To place the Cassette Holder in the down position, turn the Pulley Ass'y counterclockwise after inserting a tape.
To place it in the UNLOAD/EJECT position, turn the Pulley Ass'y clockwise.

B. How to place the Cassette Holder in the down position without a cassette tape.

METHOD

1. Disconnect AC Plug and remove the Top Cover.
2. Cover the LED Sensors below Prism L and Prism R.

Note: When handling Tape Sensor, take care of Static Electricity.
Connect AC plug. Push the tab to unlock cassette (1) and then push the tape to load it into the cassette holder (2).

Top View

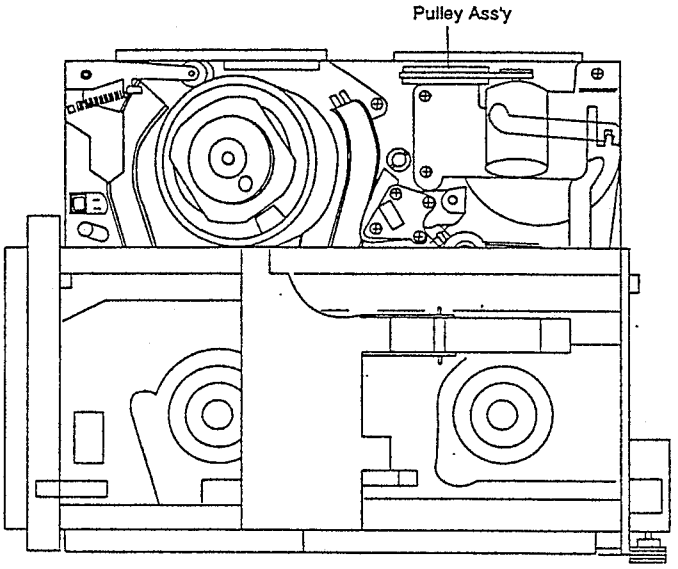

Fig. M1

Bottom View

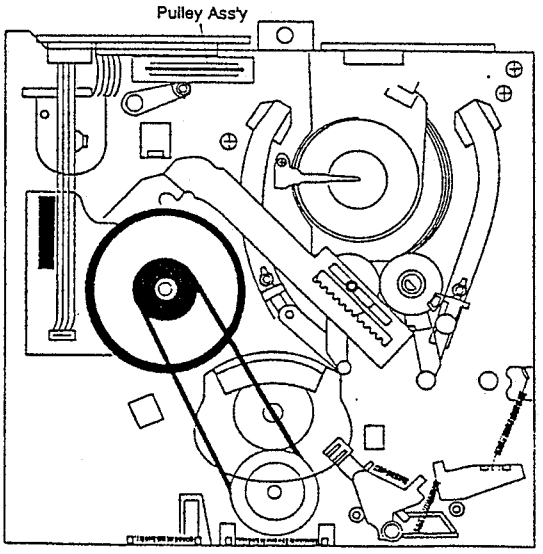

Fig. M2

1. TAPE INTERCHANGEABILITY ALIGNMENT (FINAL ALIGNMENT)

Note: To perform these alignment / confirmation procedures, make sure that the Tracking Control is set in the Neutral position.

Equipment required :

Dual Trace Oscilloscope
VHS Alignment Tape(F8-A, F8-N)
Post Alignment Screwdriver
X-Position Alignment Fixture
Screwdriver (Lock the Tape Guide Rollers)
Box Driver M3

Note: After this Mechanical Alignment, perform the Electrical Adjustment method.

Tape Running Alignment Flow Chart

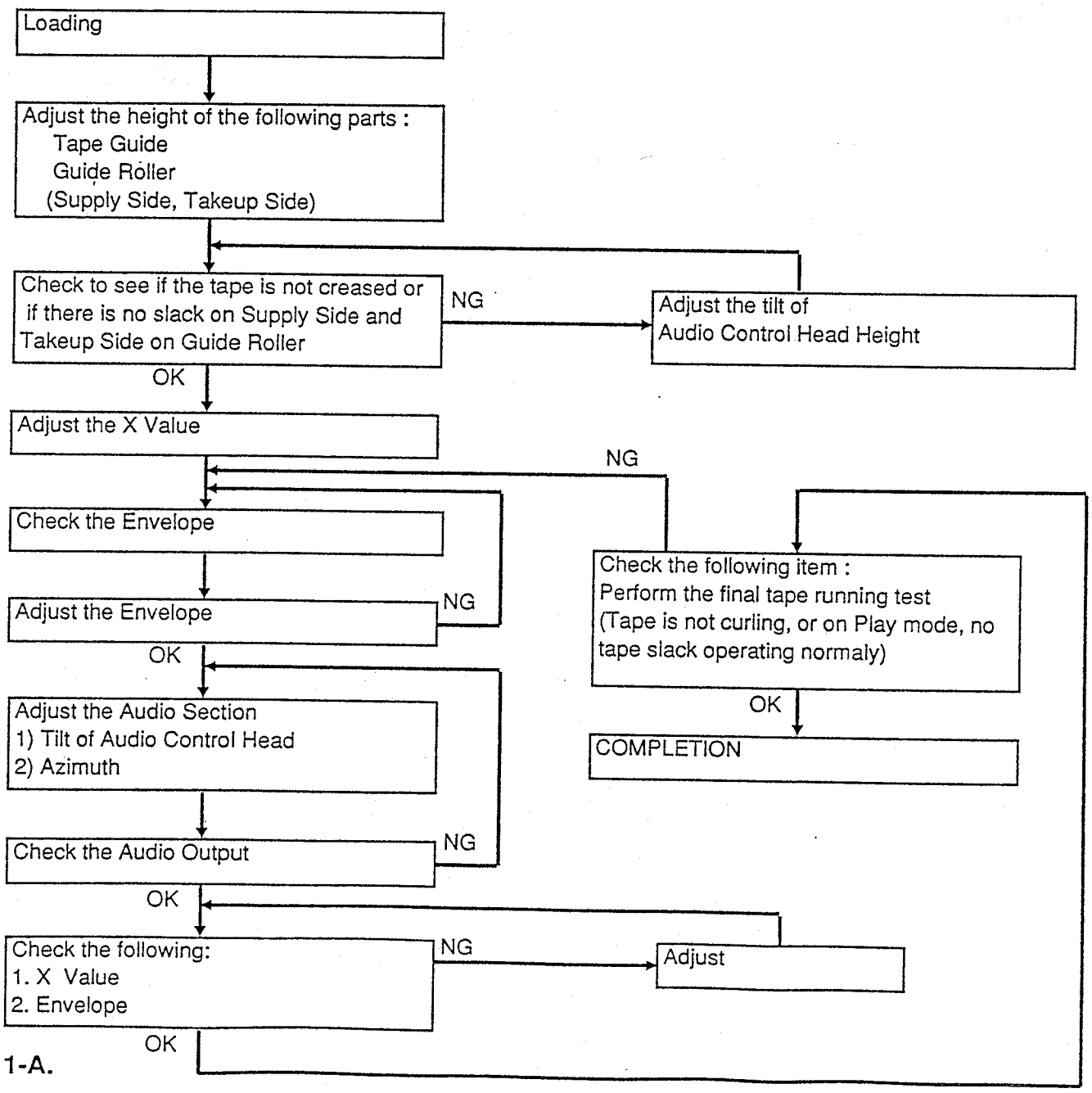

1-A.

Preliminary Confirmation and Alignment of Tape Running

Purpose:

To make sure that the tape running is well stabilized.

Symptom of Misalignment:

If the tape runs unstable, the tape will be damaged.

1. Playback (on forword) a cassette tape and confirm that the tape runs without curling or creasing at the guide rollers [2] and [3], and at the points A and B on the lead surface. (Refer to Fig M3 and M4)
2. If curling or creasing is apparent, align the height of guide rollers by turning the top of guide rollers [2] and [3] with Post Adjustment Screwdriver. (Refer to Fig. M3 and M5)

Note: Before turning Lock Screw slightly, loosen silver Lock Screw using Lock Screw wrench.

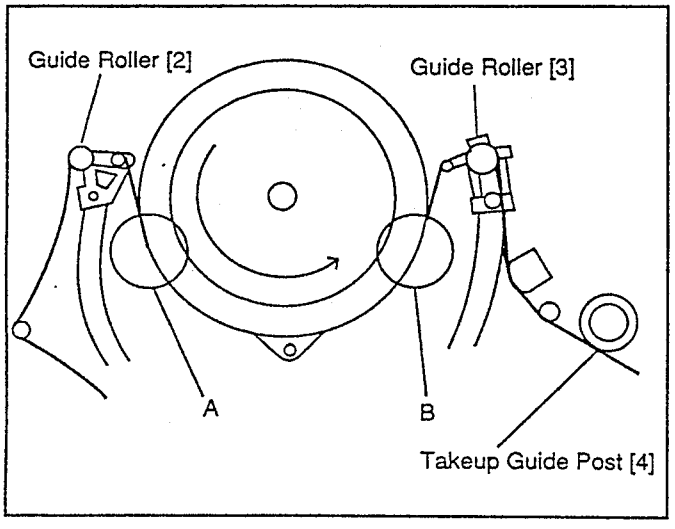

Fig. M3

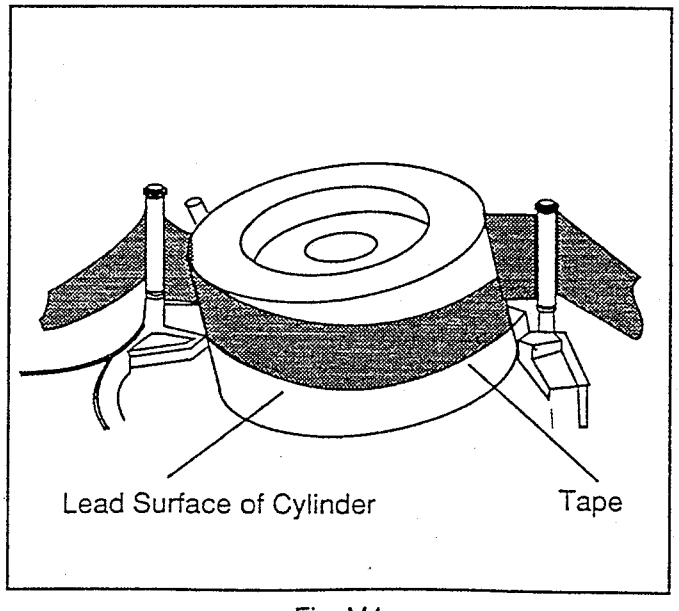

Fig. M4

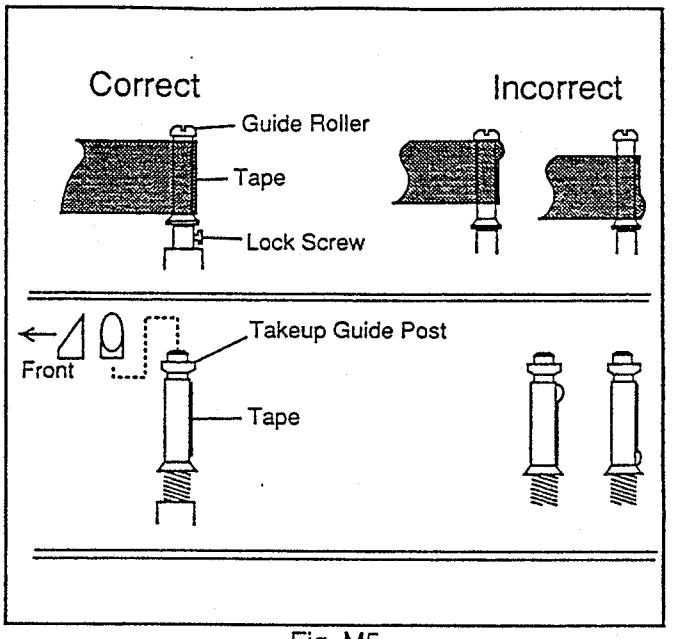

Fig. M5

1-B. Preliminary Confirmation of Audio Control Head Height

Purpose :

To make sure that the tape runs properly along the Control Head.

Symptom of Misalignment:

If the control signal is not properly picked up, Servo Operation can not be achieved.

This confirmation is required when the Audio Control Head is replaced and for a preliminary height alignment.

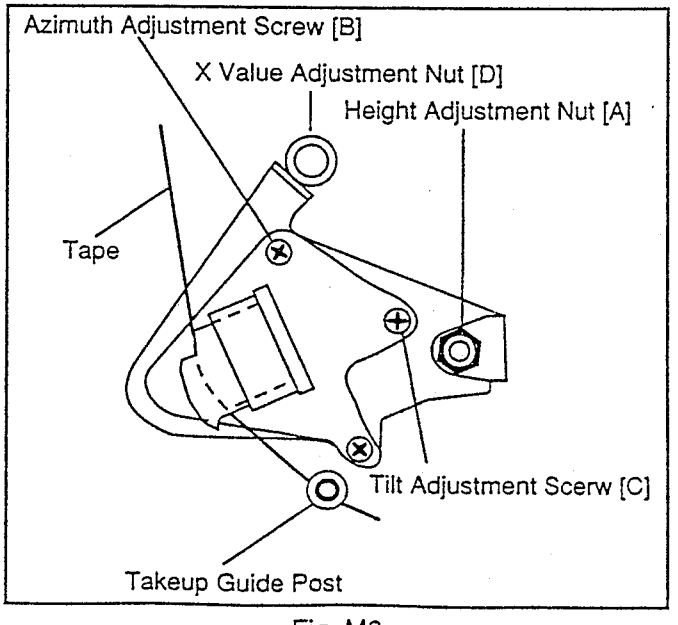

Fig. M6

For final alignment, perfbrm items 1-C and 1-D.

1. Playback a cassette tape. Looking at the lower edge of the Control Head with the tape in motion, ensure that the lower edge of the tape runs 0.15~0.25mm above the lower edge of the Control Head. If it does not run properly, turn the Height Adjustment Nut [A] slightly in either direction as necessary to correct it. Turn clockwise to lower the head and counterclockwise to raise it. (Refer to Fig. M6 and M7.)

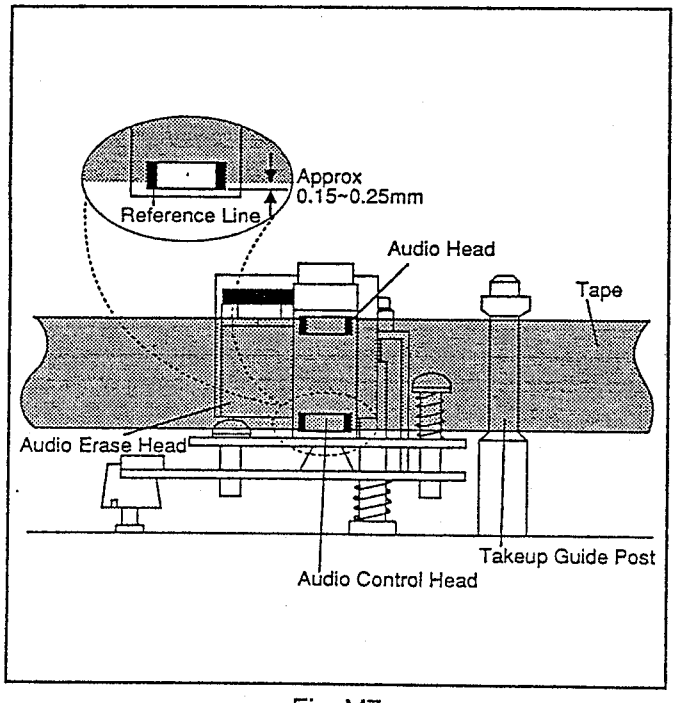

Fig. M7

1-C. Preliminary Confirmation of Tilt of Audio Control Head

Purpose:

To confirm that the tape running is well stabilized. In particular, confirm that the tape is properly picking up the Audio Signal at the upper part and the Control Signal at the lower part.

Symptom of Misalignment:

If the tilt of the Audio Control Head is poorly aligned, the tape will eventually be damaged.

Playback a cassette tape and confirm that the tape running between Takeup Guide Post [4] in Fig. M3 and Audio Control Head has no slack. If the tape has slack, align the Control Head by turning tilt adjustment screw [C] in Fig. M6 so that the tape has no slack.

1-D. Final Height Alignment of Audio Control Head

Purpose:

To align the position and height of Audio Control Head so that it meets the tape tracks properly.

Symptom of Misalignment:

If the position of Audio Control Head is not properly aligned, the Audio S/N Ratio or Frequency Response is also poor.

1. Connect the oscilloscope to the audio output jack on the rear of deck.
2. Confirm that the Tape running condition between Takeup Guide Roller and Audio Control Head has no tape slack. If there is tape slack, remove the tape slack by turning the Tilt Adjustment screw [C]. Then realign the height of Guide Roller (Item 1-A).
3. Playback the Monoscope Portion (1kHz, Audio) on the alignment tape (F8-A), then confirm that the audio signal output level is 1KHz. Finally adjust the Height Adjustment Nut [A] so that the output level is at maximum.(Fig. M6)
4. Adjust the Azimuth Adjustment Nut [B] so that the output level of AC Voltmeter Value is at maximum.(Fig. M6)

Note: Fix the screw [C] with lock paint after realignment.

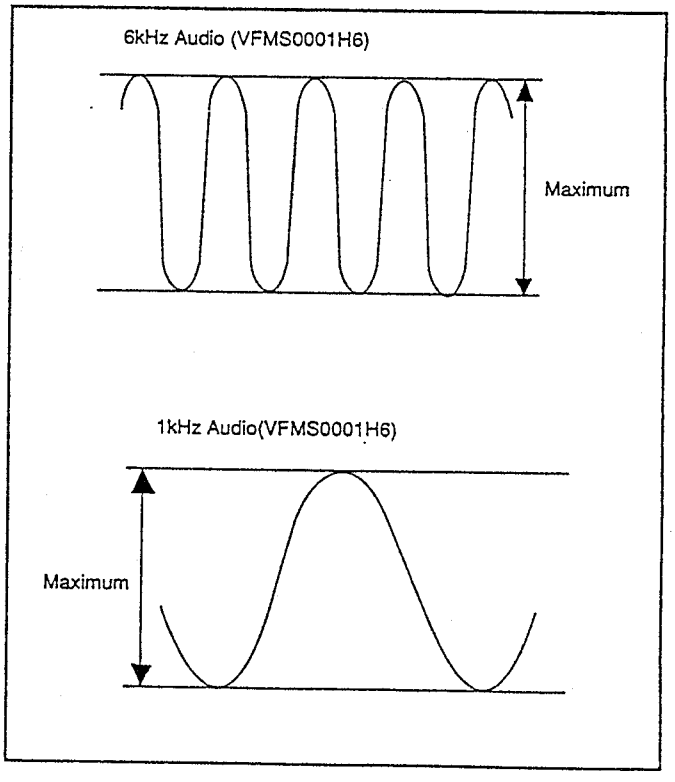

Fig. M8

Azimuth Alignment of Audio Control Head

Purpose:

To correct the Azimuth alignment so that the Control Head angle meets tape tracks properly.

Symptom of Misalignment:

If the position of Audio Control Head is not properly aligned, the Audio S/N Ratio or Frequency Response is also poor.

1. Connect the oscilloscope to the audio output jack on the rear of the deck.
2. Playback the Monoscope pattern (6kHz, audio) on the alignment tape (F8-N), and adjust the Height Adjustment Nut so that the output level of AC Voltmeter or waveform of oscilloscope is at maximum.

Note:

Fix the screw [C] with lock paint after realignment.

1-E. Final X Value Alignment

Purpose:

To align the Horizontal Position of the Audio Control Head.

Symptom of Misalignment:

If the Horizontal Position of the Audio Control Head is not properly aligned, maximum envelope cannot be obtained at the Neutral Position of the Tracking Control Circuit by pressing CH UP and DOWN bottons on VCR at the same time.

1. Set the Tracking Control to the Neutral position.
2. Connect the oscilloscope to TP of C-PB on Main C.B.A. Use TP RF-SW as a Trigger.
3. Playback the Monoscope pattern of the Alignment Tape (F8-N) and confirm that the PB FM signal is present.
4. Adjust the X Value adjustment Nut with X Position Adj-Fixture so that the PB FM signal is at maximum.

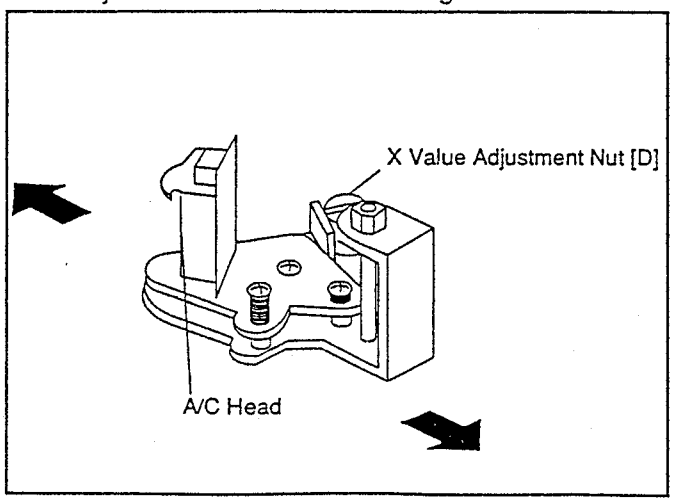

Fig. M9

1-F. Final Confirmation / Adjustment of Envelope Waveform

Purpose:

To achieve a satisfactory picture and secure precise tracking.

Symptom of Misalignment:

If the envelope output is poor, noise will appear in the picture. Then the tracking will lose precision and the playback picture will be distorted by any slight variation of the Tracking Control.

1. Set the Tracking Control to the Neutral Position by pressing CH UP and DOWN bottons on VCR at the same time.
2. Connect the oscilloscope to TP C-PB on Main C.B.A. Use TP RF-SW as a Trigger.
3. Playback the Monoscope pattern on the Alignment Tape (F8-N). Adjust the height of Guide Rollers [2] and [3] watching scope display so that the envelope becomes as flat as possibile. If adjustment is required, turn the top of the Guide Roller with the Post Adjustment Screwdriver.

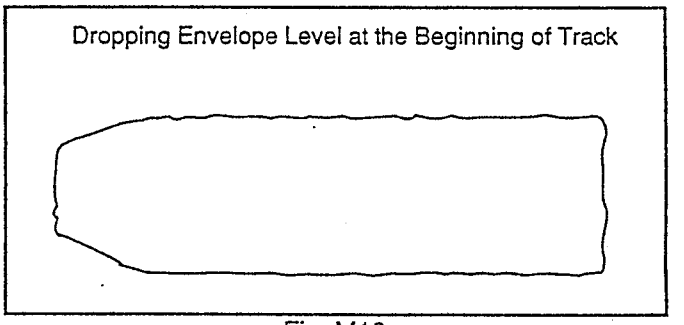

Fig. M10

4. When the Scope Display is as shown in Fig. M10, adjust the height of [2] (Refer to Fig.M3) so the waveform looks like Fig. M12.

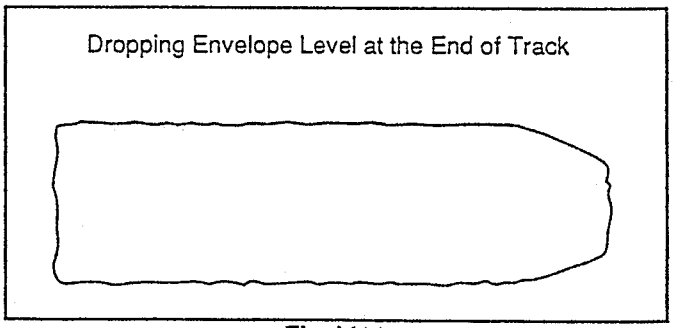

Fig. M11

5. When the Scope display is as shown in Fig. M11, adjust the height of [3] (Refer to Fig.M3) so the waveform looks like Fig. M12.

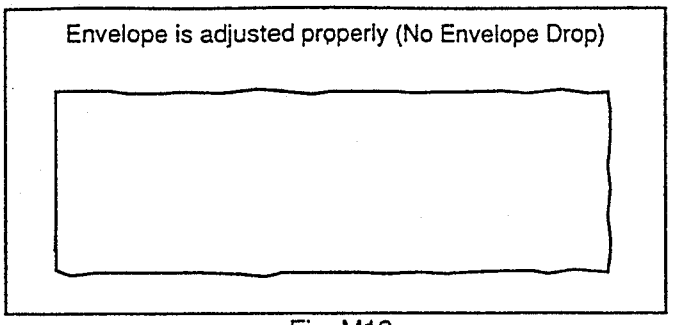

Fig. M12

6. When [2] and [3] (Refer to Fig.M3) are aligned properly, there is no Envelope Drop either at the beginning or end of track as shown in Fig. M12.

Note:

Upon completion of adjustment of Guide Roller [2] and [3], tighten the silver Lock Screw on [2] and [3] using Lock Screw wench. Then confirm the X VALUE by pushing the Tracking Control Up or Down buttons alternately, to check the symmetry of the envelope. If required, perform "X VALUE ALIGNMENT".

DISASSEMBLY/ASSEMBLY PROCEDURES OF DECK MECHANISM

Main Mechanism

This procedure starts with the condition that the Cabinet Parts and Cassette Up Unit have been removed. Also, all the following procedures for adjustment and parts replacement should be performed in Stop mode. When reassembling, perform the steps in the reverse order.

STEP /LOC. No.	STARTING No.	PART		REMOVAL		INSTALLATION
				Fig. No.	REMOVE*UNHOOK/ UNLOCK/RELEASE/ UNPLUG/DESOLDER	ADJUSTMENT CONDITION
[1]	[1]	MOTOR HOLDER ASS'Y	T	DM1 DM4	3(S-2), (P-1), Belt	
[2]	[1]	LDG MOTOR PREPARATION	T	DM1 DM4	2(S-3), CN2902	
[3]	[1]	CLEANING HEAD	T	DM1	(S-11)	
[4]	[1]	PINCH ROLLER ARM ASS'Y	T	DM1 DM4	(C-1) Pinch Roller Spring	
[5]	[1]	PINCH ARM ASS'Y	T	DM1 DM4		
[6]	[1]	CAM	T	DM1 DM4		
[7]	[1]	JOINT CBA	T	DM1 DM2 DM8	(S-8), CN2903 CN2801, *CL2901	For Connecting, Refer to Connectors Points
[8]	[1]	PULLEY ASS'Y	T	DM1 DM5	*(L-5), LDG BELT (W-1)	
[9]	[9]	CLUTCH BLOCK ASS'Y	T	DM1 DM2 DM7	2(S-7) CAPSTAN BELT	
[10]	[10]	HEAD AMP CBA	T	DM1 DM2 DM8	(S-9), CN02, CN03 CN1(CYL MTR)	For Connecting, Refer to Connetors Points.
[11]	[11]	CAPSTAN MOTOR UNIT	B	DM2 DM10	3(S-10)	
[12]		MODE SW	B	DM2 DM8	(L-5), *CL2901	For Connecting, Refer to Connectors Points.
[13]		M LEVER HOLDER ASS'Y	T	DM2 DM9	(S-14)	(+)
[14]		KICK ARM HOLDER ASS'Y	B	DM2 DM9		(+)
[15]		KICK ARM	B	DM2 DM9		(+)
[16]		MODE CHANGE LEVER	T	DM1 DM11	*2(L-2)	
[17]		MAIN LEVER ASS'Y	T	DM1 DM12	*(L-3)	
[18]		TAPE GUIDE ASS'Y	T	DM1 DM12	*(P-5), *(L-4), (M5.5)	See Fig. DM12
[19]		A/C HEAD ASS'Y	T	DM1 DM13	Nylon Nut, Head Height Adjustment Spring	See Fig. DM13
[20]		TENSION LEVER SUB ASS'Y	T	DM1 DM14	*(L-1)	(+)
[21]		BAND BRAKE SUB ASS'Y	T	DM1 DM14	(S-1), (L-6)	
[22]		M BRAKE (S)	T	DM1 DM15	*(P-2), (L-7)	(+) When reassembling, hook the Spring after installation of Mode Change Lever.
[23]		M BRAKE (S) LEVER	T	DM1 DM15		
[24]		S BRAKE ARM	T	DM1 DM15	*(P-3)	When reassembling, hook the Spring after installation of Mode Change Lever.
[25]		M BRAKE (T) ASS'Y	T	DM1 DM15		

STEP /LOC. No.	STARTING No.	PART		REMOVAL		INSTALLATION
				Fig. No.	REMOVE*UNHOOK/ UNLOCK/RELEASE/ UNPLUG/DESOLDER	ADJUSTMENT CONDITION
[26]		T BRAKE ARM ASS'Y	T	DM1 DM15	*(P-4)	When reassembling, hook the Spring after installation of Mode Change Lever
[27]		REEL BASE ASS'Y'S (S+T)	T	DM1 DM16	2 Poly Slider Washers	(+)
[28]		EARTH BRUSH ASS'Y	B	DM2 DM17	(S-4)	When reassembling, confirm that the brush is within 1 mm of center of shaft.
[29]		CYLINDER DRUM ASS'Y	T	DM1 DM17	3(S-5), 3(S-6), CN02	
[30]		MOVING GUIDE ASS'Y	T	DM1 DM20	(S-15)	(+)
[31]		MOVING GUIDE T ASS'Y	T	DM1 DM20	(S-15)	(+)
[32]		LOADING ARM M ASS'Y	B	DM2 DM21	(C-3)	When installing, match the marks.
[33]		LOADING GEAR B	B	DM2 DM21	(P-8)	(+)
[34]		LOADING GEAR A	B	DM2 DM21	(P-9)	(+)
[35]		REC ARM	B	DM2 DM19	(S-16), (P-6)	
[36]		BT DRIVE ARM	B	DM2 DM19	(S-16), (P-7)	
[37]		FE HEAD	T	DM2 DM20	(S-12)	(+)
[38]		LUMINESCENCE PRISM	T	DM2 DM20	(S-13)	(+)
①	②	③	④	⑤	⑥	⑦

Note :

① :Order of steps in Procedure. When reassembling, perform the step(s) in the reverse order.
These numbers are also used as the identification (Location) No. of parts in Figures.

② :The step No. to start with before coming to the corresponding step No. when disassembling.
M Brake S can be removed without removing Mode Change Lever (No. 1).

③ :Parts to be removed or installed.

④ :Location of part
T=Top B=Bottom R=Right L=Left

⑤ :Fig. No. Showing Procedure or Part Location

⑥ :Identification of part to be removed, unhooked, unlocked, released, unplugged, unclamped or desoldered.
P=Spring, W=Washer, C=Cut Washer, S=Screw, *=Unhook, Unlock, Release, Unplug or Desolder
2(C-2) = 2 Cut Washer(C-2), 2(L-2) = 2 Locking Clips(L-2), (N-1) = 1 Locking Pin(N-1)

⑦ :Adjustment Information for Installation(+)
Refer to Deck Exploded Views for lubrication information.

TOP VIEW

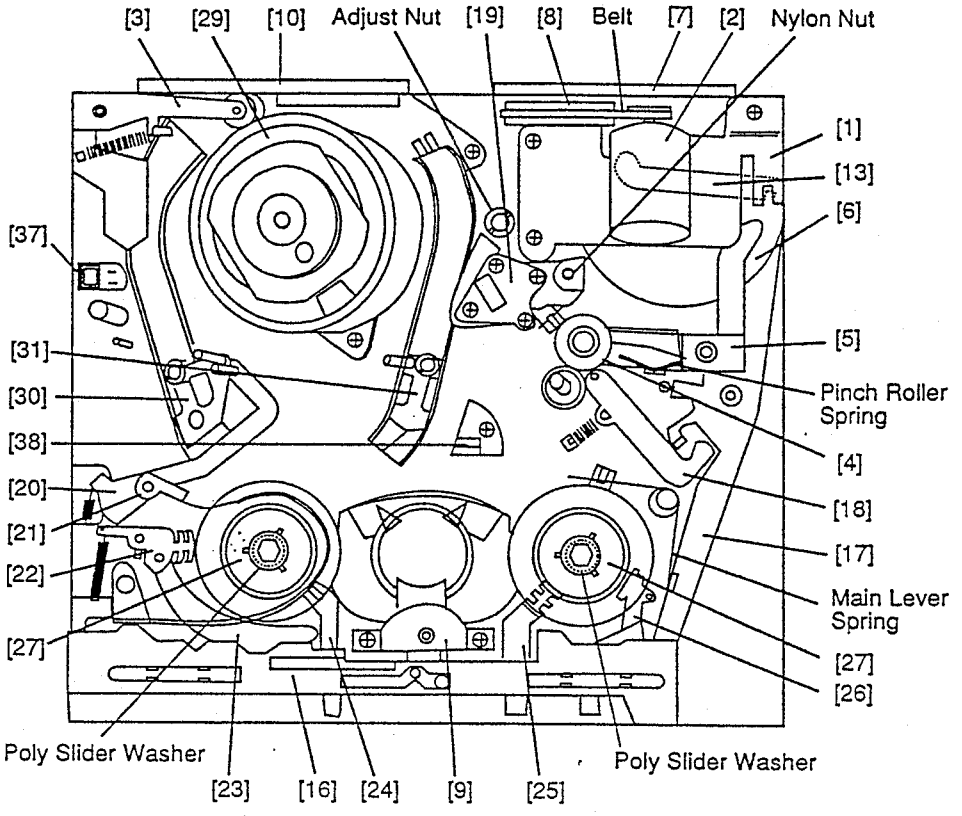

Fig. DM1

BOTTOM VIEW

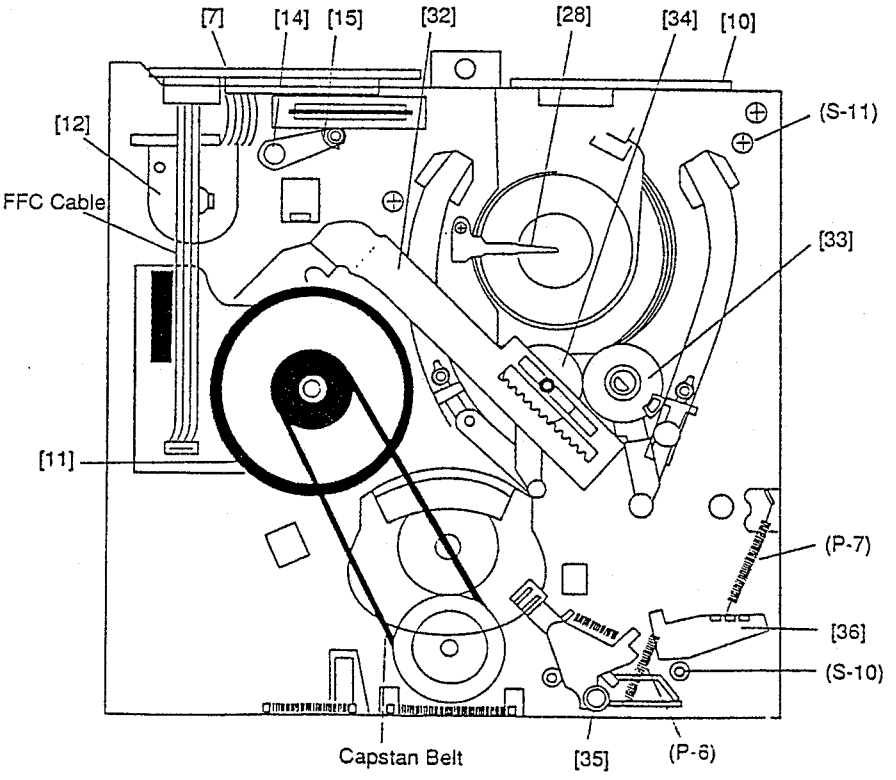

Fig. DM2

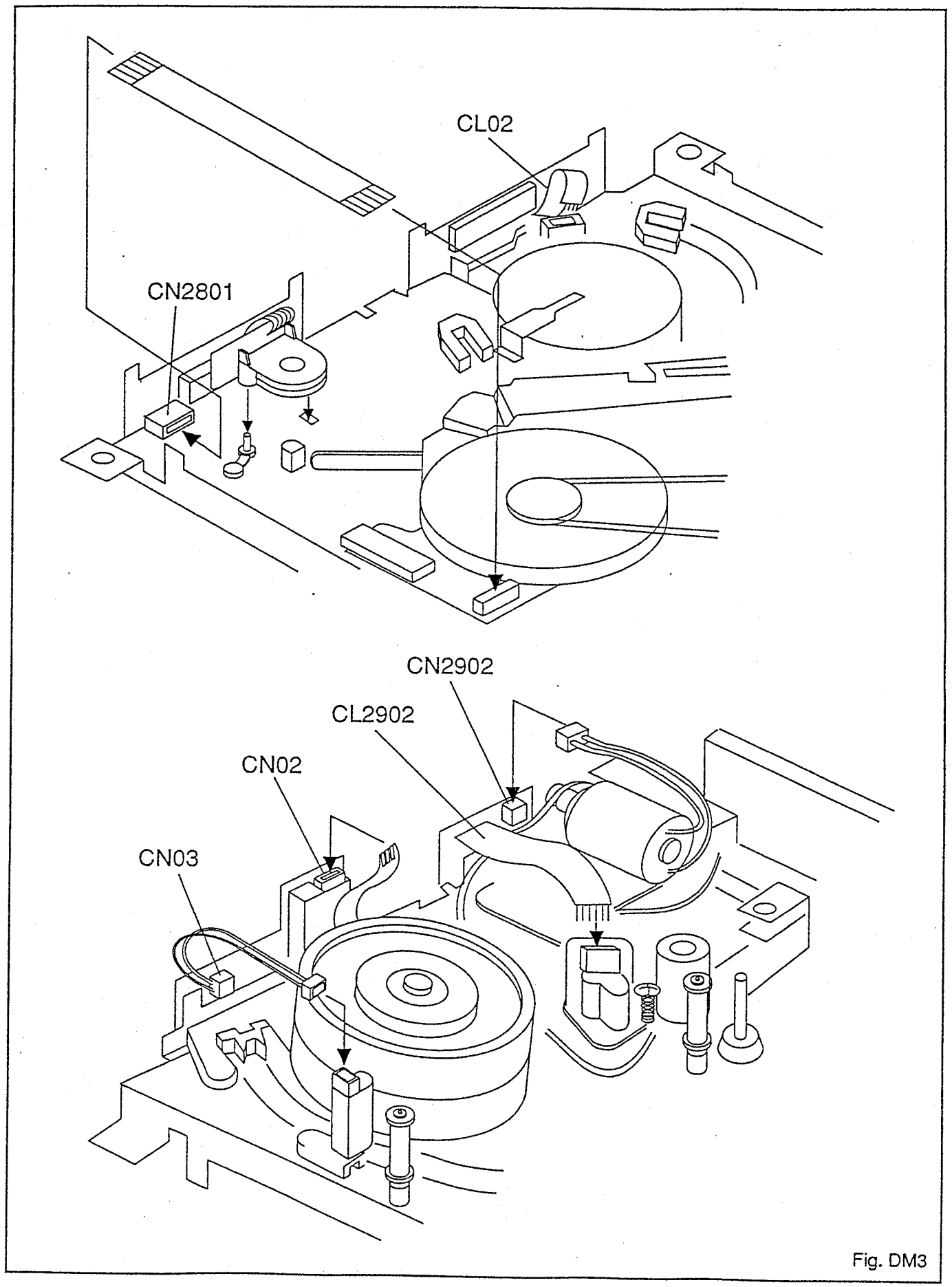

Fig. DM3

(S-2)
(S-3)
[1]
[2]
Pinch Roller Spring
(P-1)
Ⓐ
(C-1)
[4]
[5]
Ⓐ
[6]
Ⓑ
CAM
Ⓒ

When reassembling, the hole Ⓑ of the CAM should be properly placed to align the hole Ⓒ of the Chassis.

Fig. DM4

(L-5)
(W-1)
LDG Belt
[8]
"A"

View "A"

Pull in this direction to remove.

Push to unlock.

Fig. DM5

JOINT C.B.A.
(S-4)

Fig. DM6

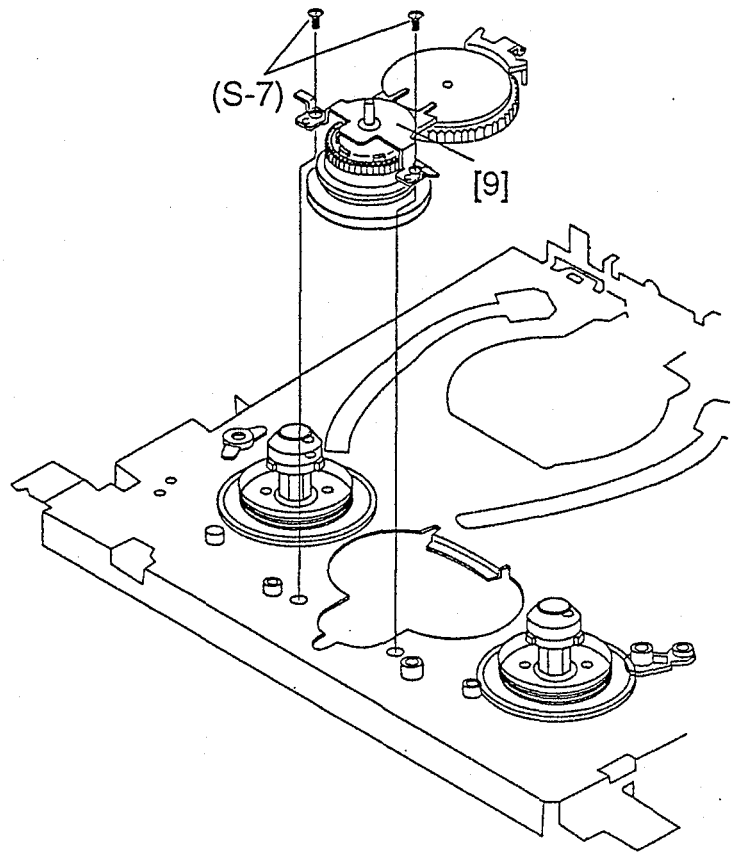

Fig. DM7

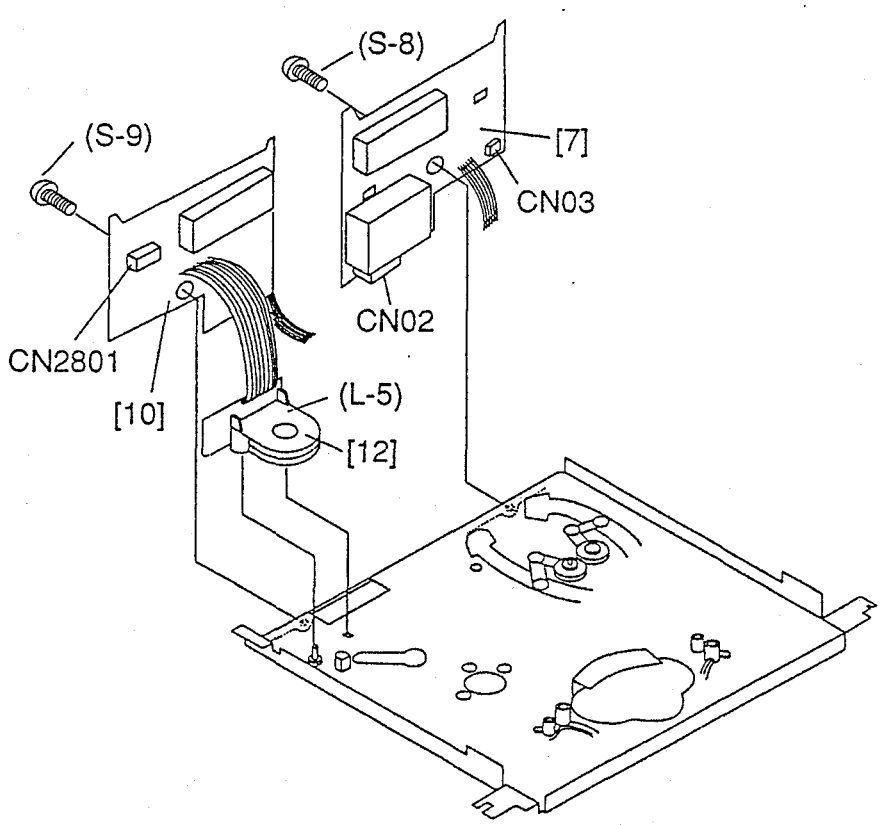

Fig. DM8

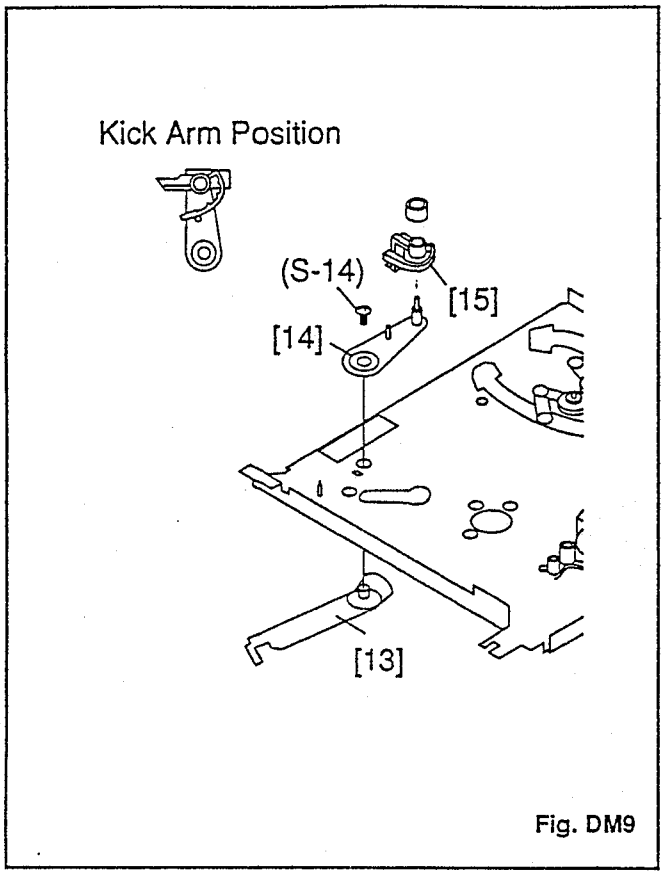

Fig. DM9

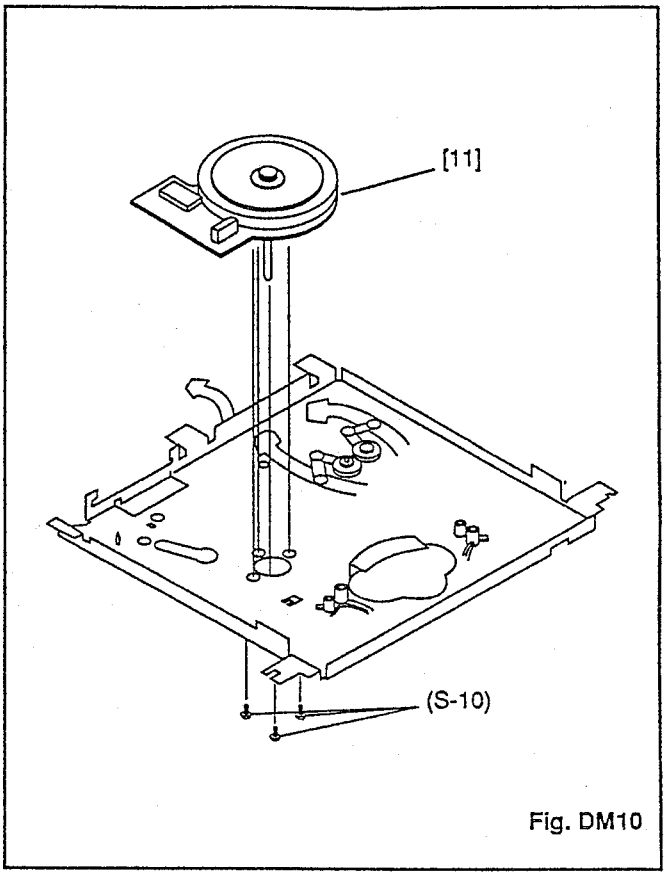

Fig. DM10

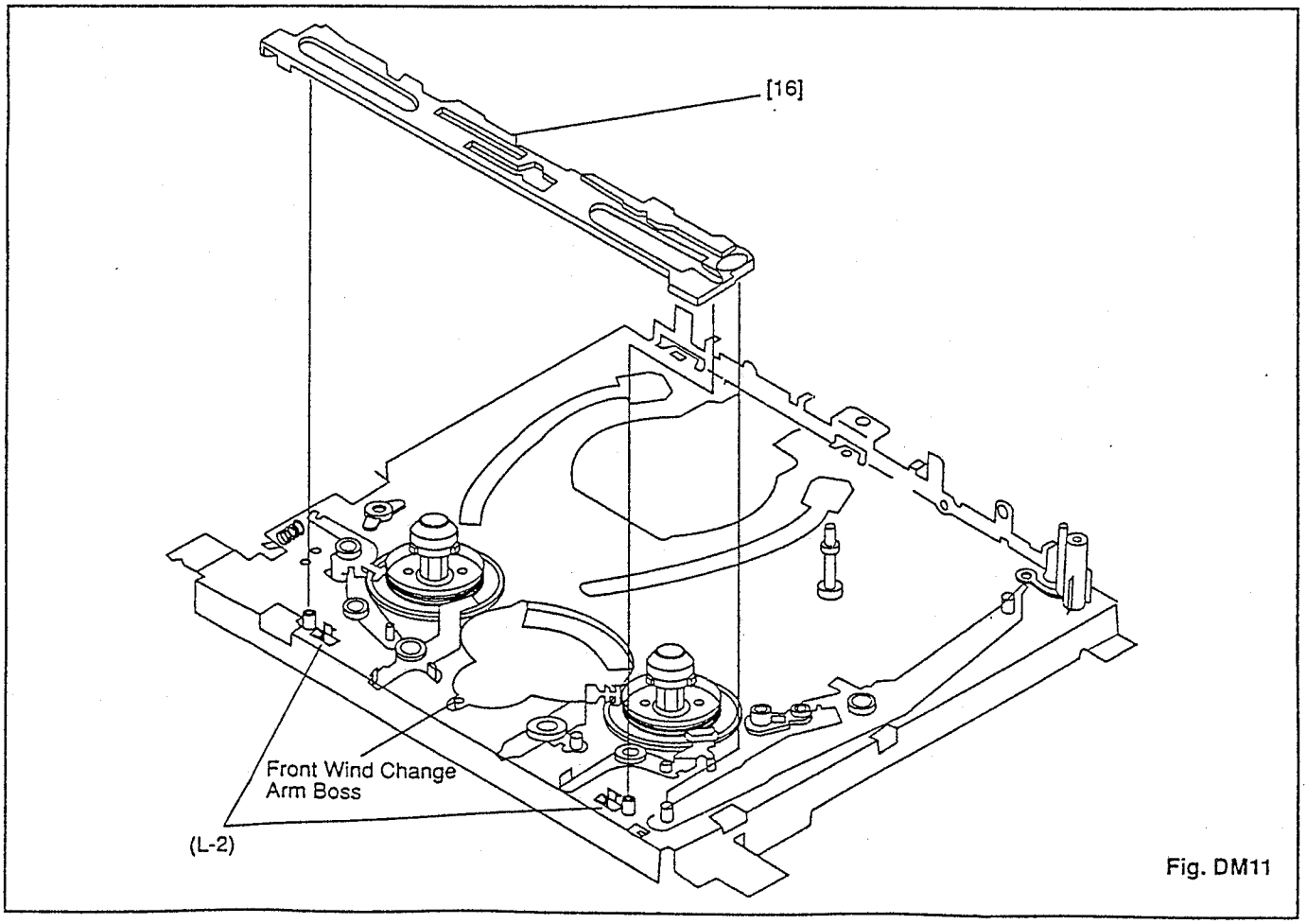

Fig. DM11

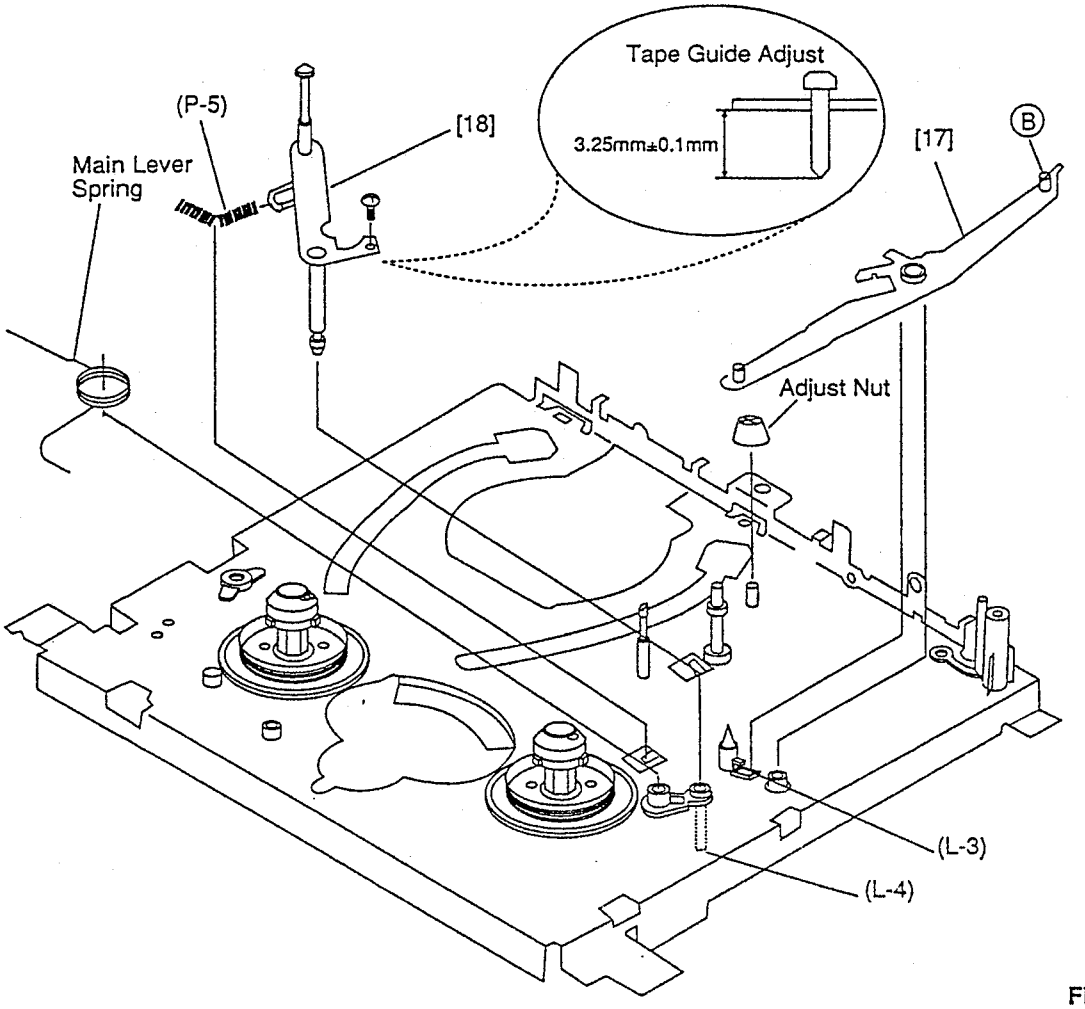

Fig. DM12

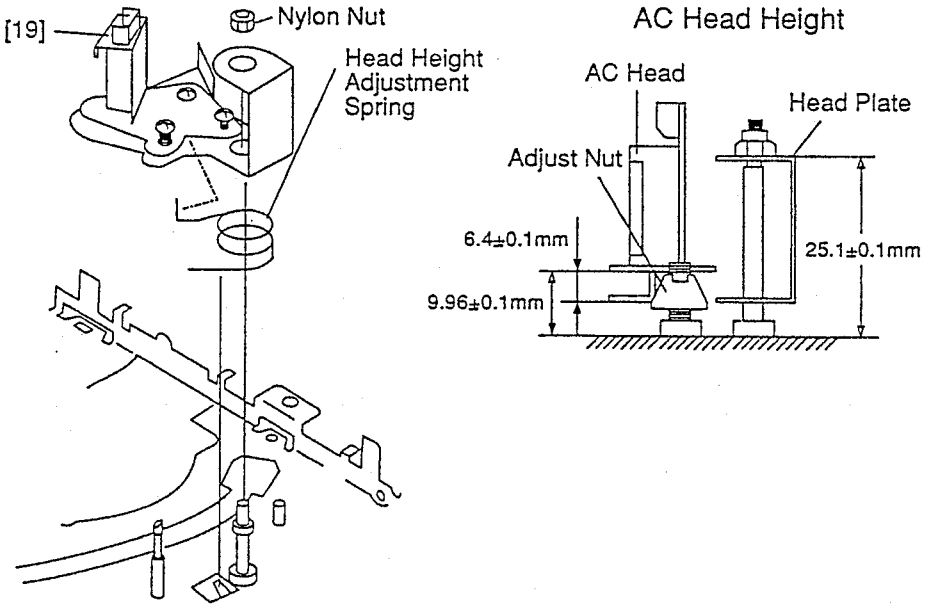

Fig. DM13

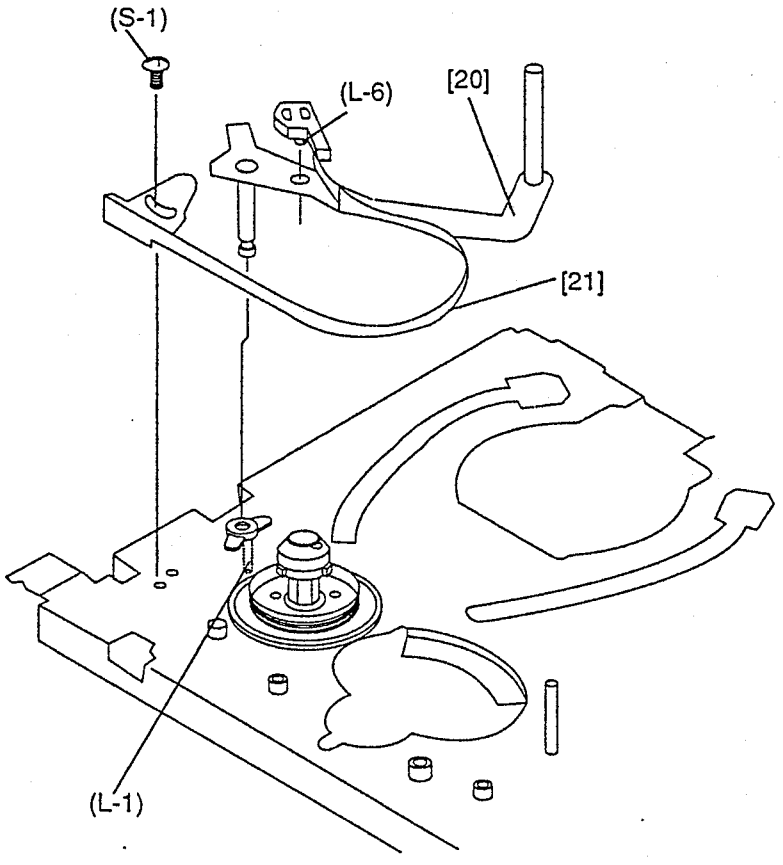

Fig. DM14

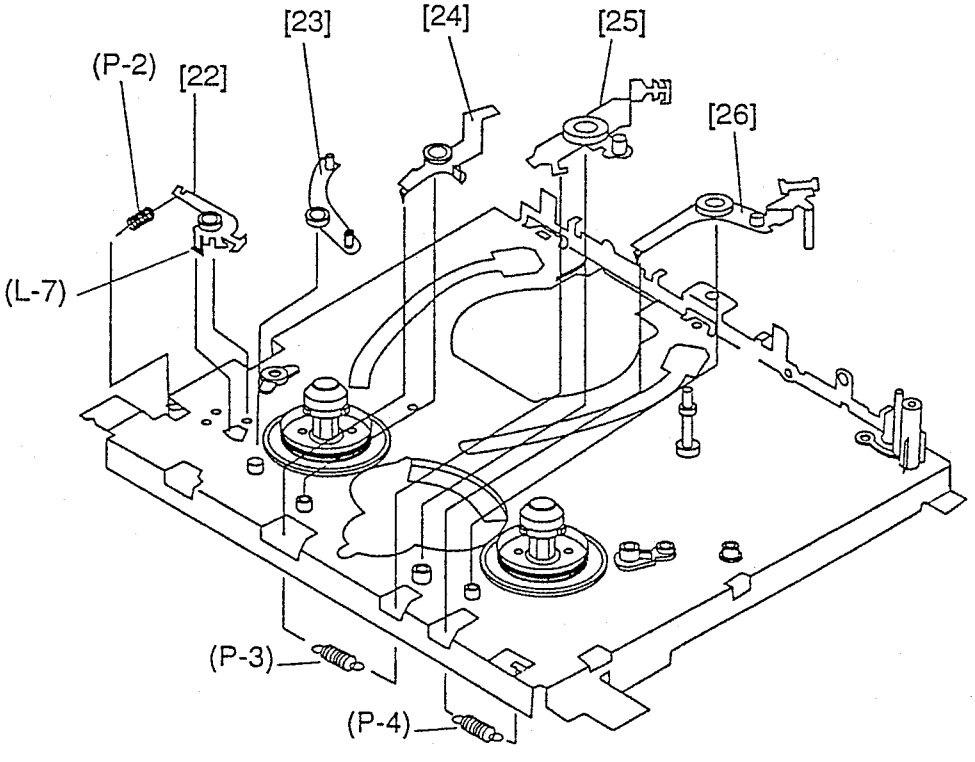

Fig. DM15

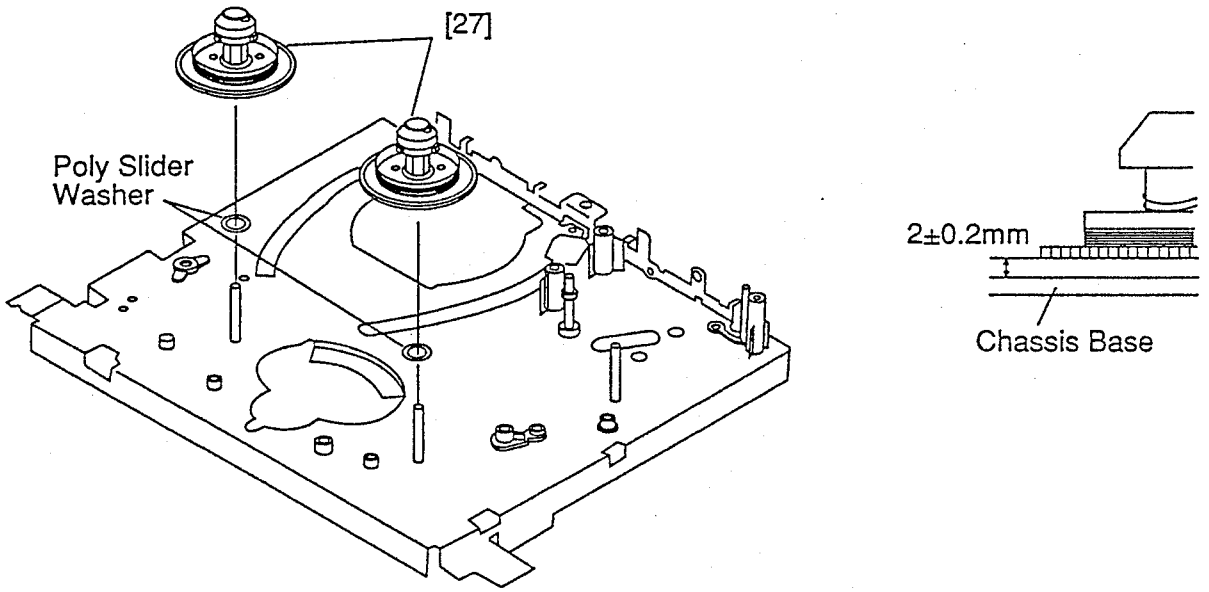

Fig. DM16

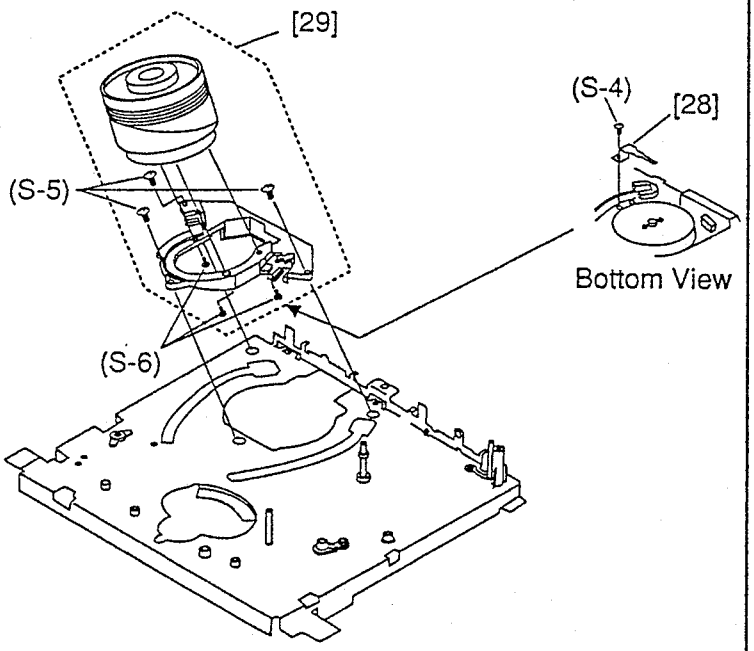

Fig. DM17

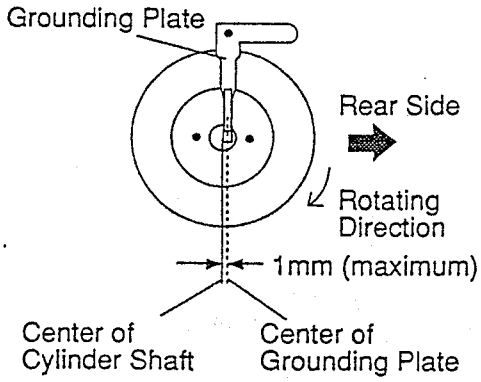

Fig. DM18

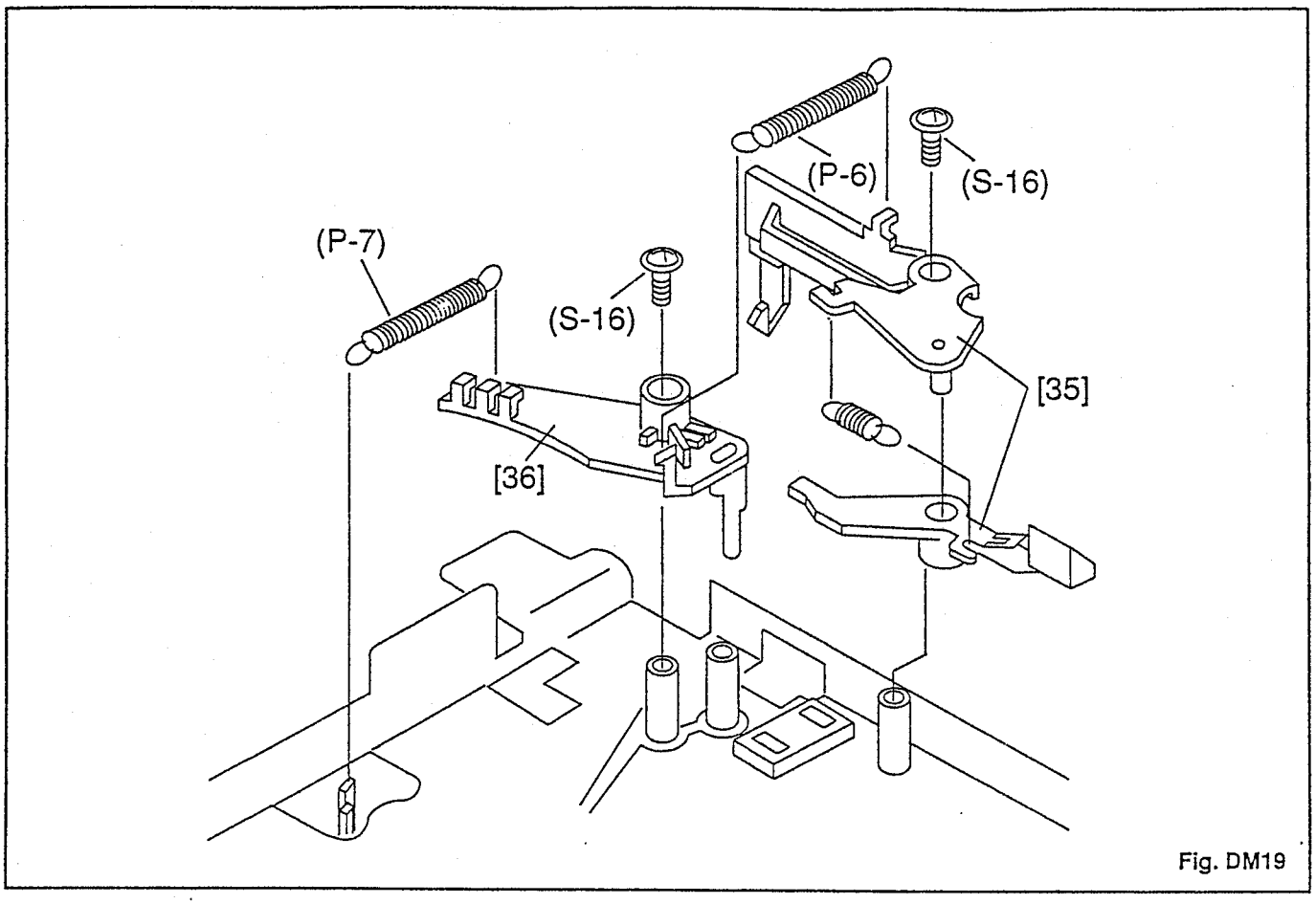

Fig. DM19

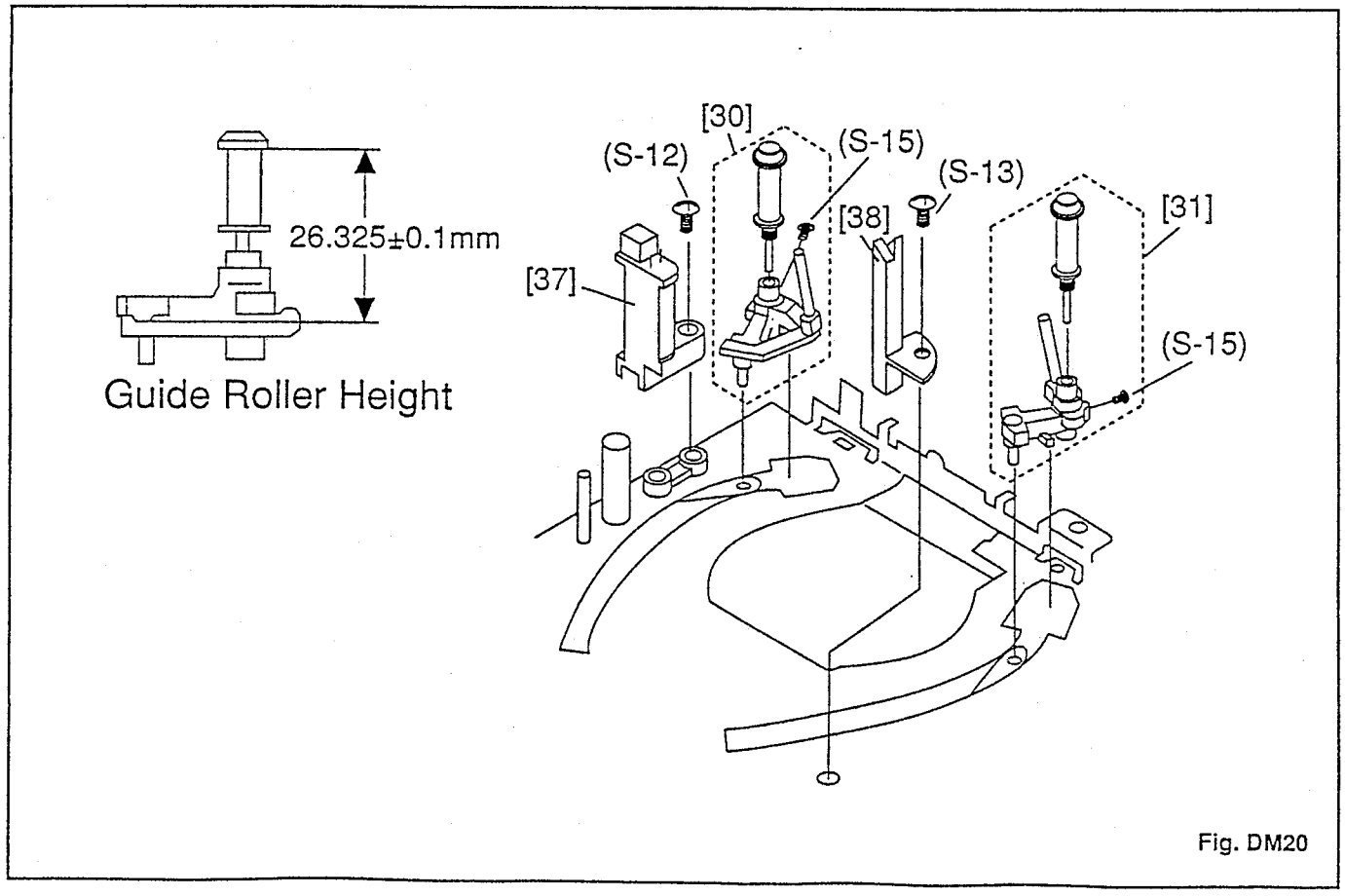

Fig. DM20

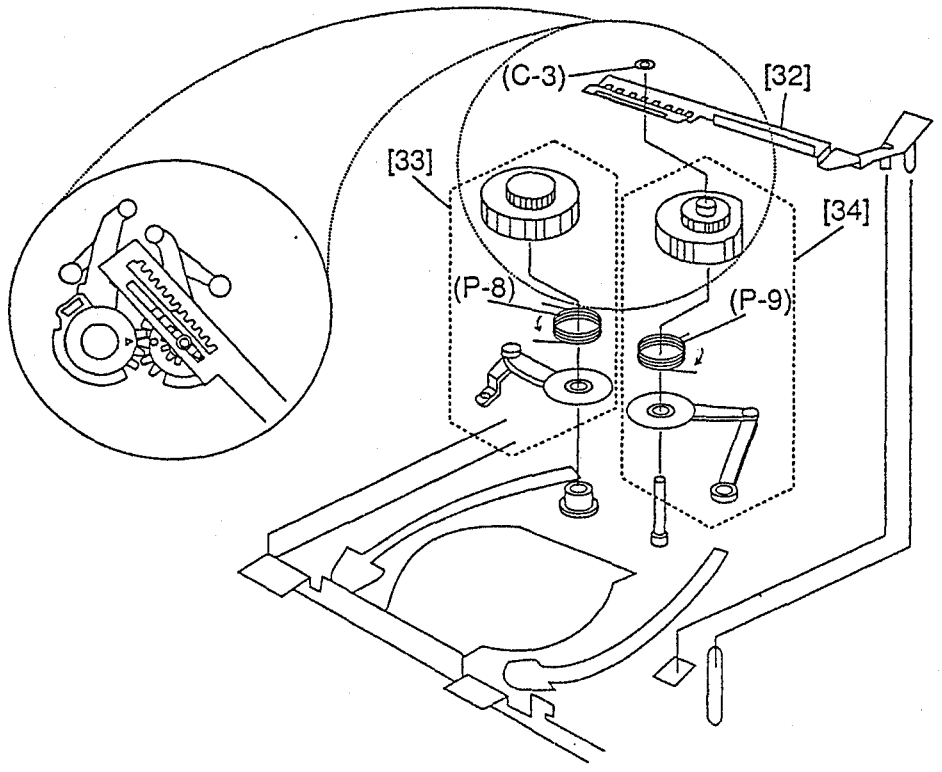

Fig. DM21

Cassette Up Unit

This procedure starts with the condtion that the Cassette Up Unit has been removed from chassis. When reassembling, perform the step(s) in the reverse order. (For removal of Casset Up Unit, see Fig.DM5.)

STEP /LOC No.	STARTING No.	PART	REMOVAL		INSTALLATION
			Fig. No.	REMOVE*UNHOOK/ UNLOCK/RELEASE/ UNPLUG/DESOLDER	ADJUSTMENT CONDITION
[1]	[1]	Reinforcement	DM1	2(S-1)	
[2]	[1]	Frame L	DM1	2(S-2)	
[3]	[1]	Stand B	DM1	(S-3)	
[4]	[1]	Stand F	DM1	(S-4)	
[5]	[1]	Bracket Gear	DM2	2(S-5)	Through the hole
[6]	[1]	Pulley Reduction	DM2	(C-1)	
[7]	[1]	Cam (HL Control)	DM2	(C-2)	Through the hole
[8]	[8]	Lever Syncro B	DM3	(L-1)(P-1)(P-2)(C-3)	
[9]	[9]	Lever Opener	DM3	(L-2)	
[10]	[10]	Lever Syncro F	DM4	(L-3)(P-3)(P-4)(C-4)	
①	②	③	④	⑤	⑥

① : Order of steps in Procedure
When reassembling, perform the step(s) in the reverse order.
These number are also used as the identification(Location) No. of parts in Figures.

② : The STEP/LOC. No. to start with before coming to disassemble the desired part.

③ : Parts to be removed or installed

④ : Fig. No Showing Procedure or Part Location

⑤ : Identification of part to be removed, unhooked, unlocked, released, unplugged, unclamped or unsoldered
P=Spring W=Washer C=Cut Washer S=Screw *=Unhook, Unlock Release Unplug or Desolder
2(C-2) = 2 Cut Washer (C-2)

⑥ : Adjustment information for installation (+)
Refer to Deck Exploded Views for lubrication information.

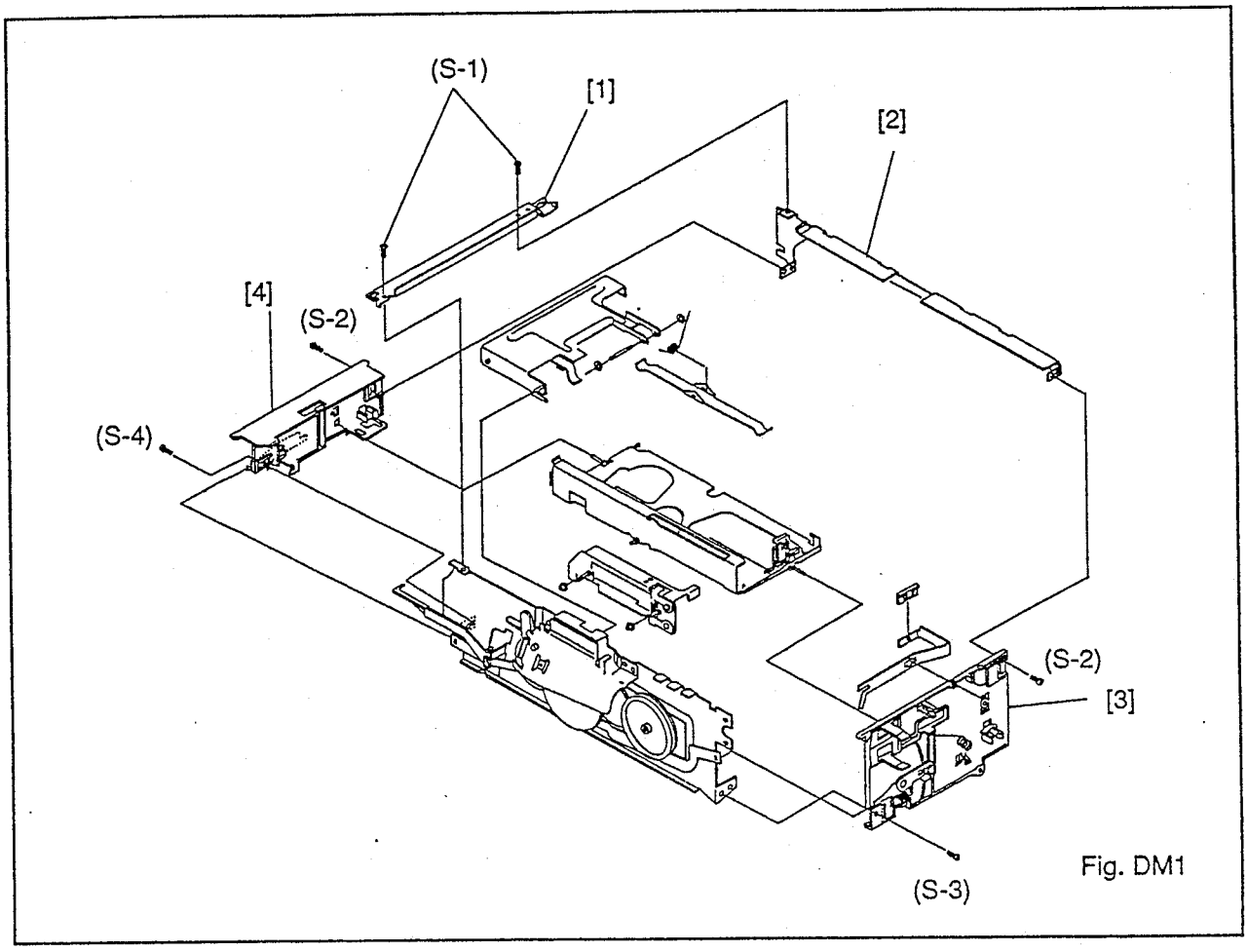

Fig. DM1

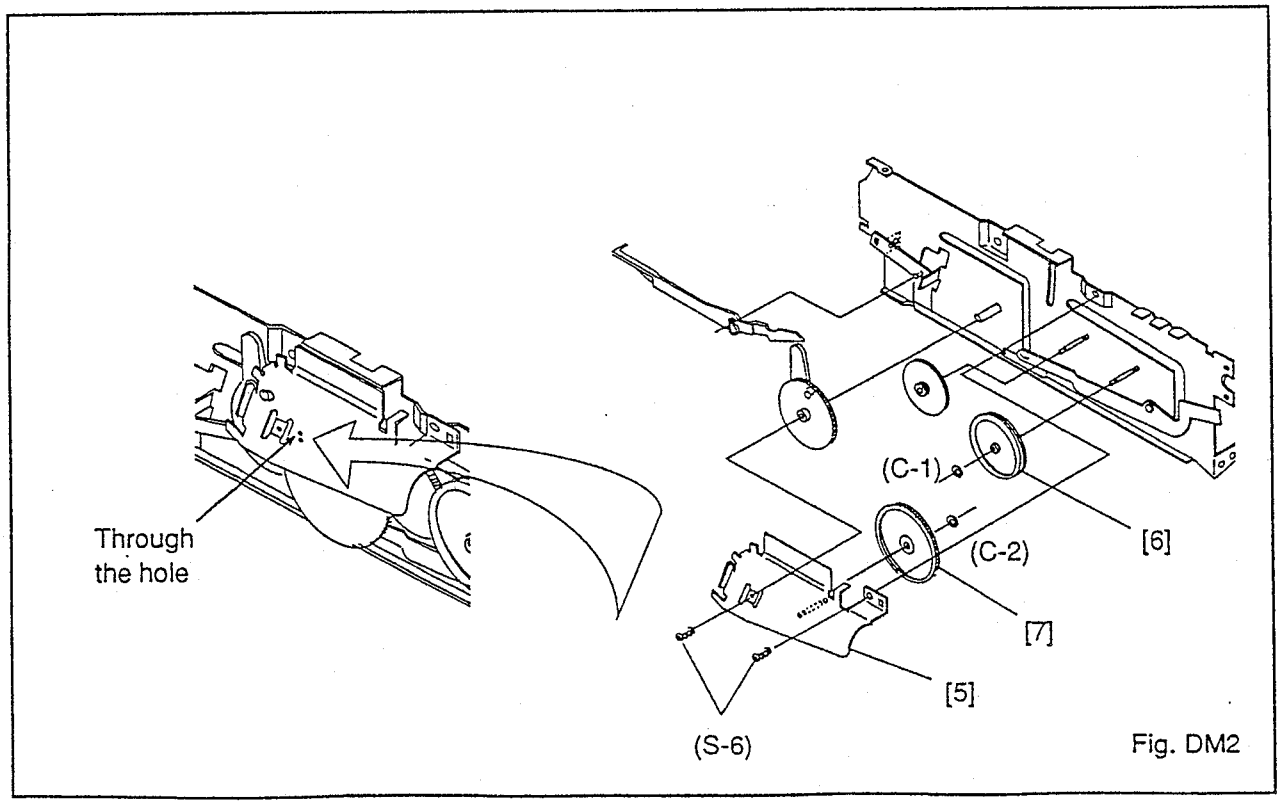

Fig. DM2

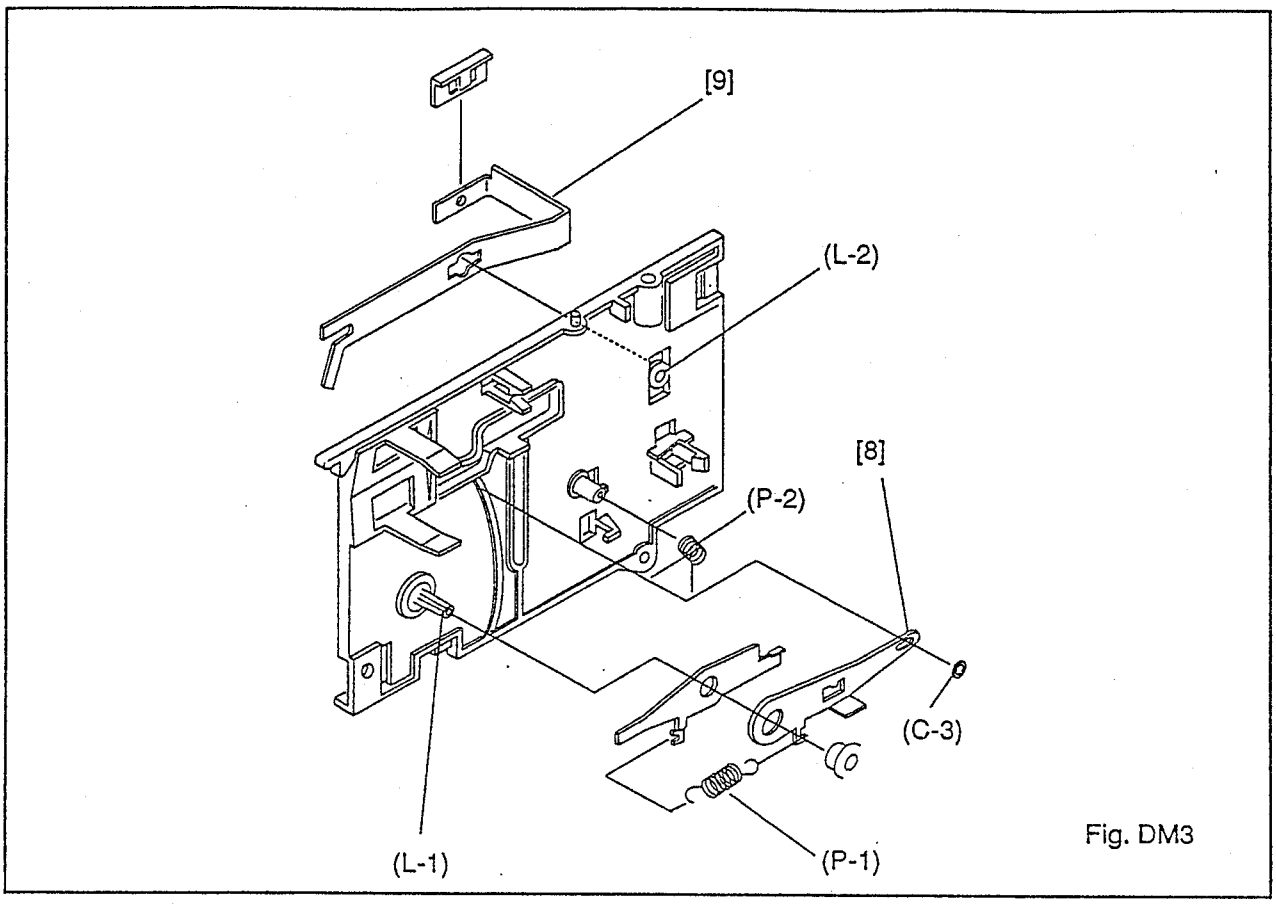

Fig. DM3

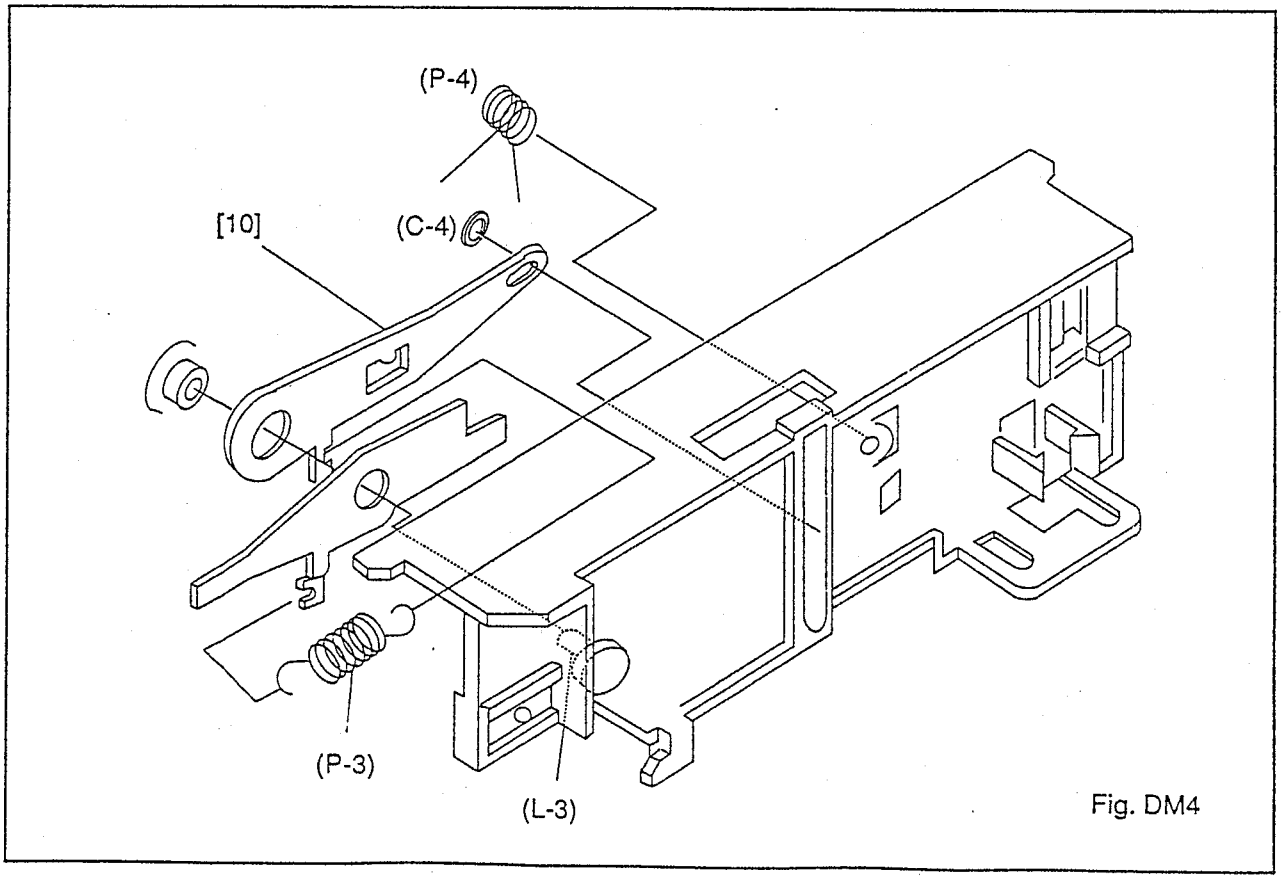

Fig. DM4

SCHEMATIC DIAGRAMS AND CIRCUIT BOARD

JOINT/MODE SW/ACE HEAD SCHEMATIC DIAGRAM

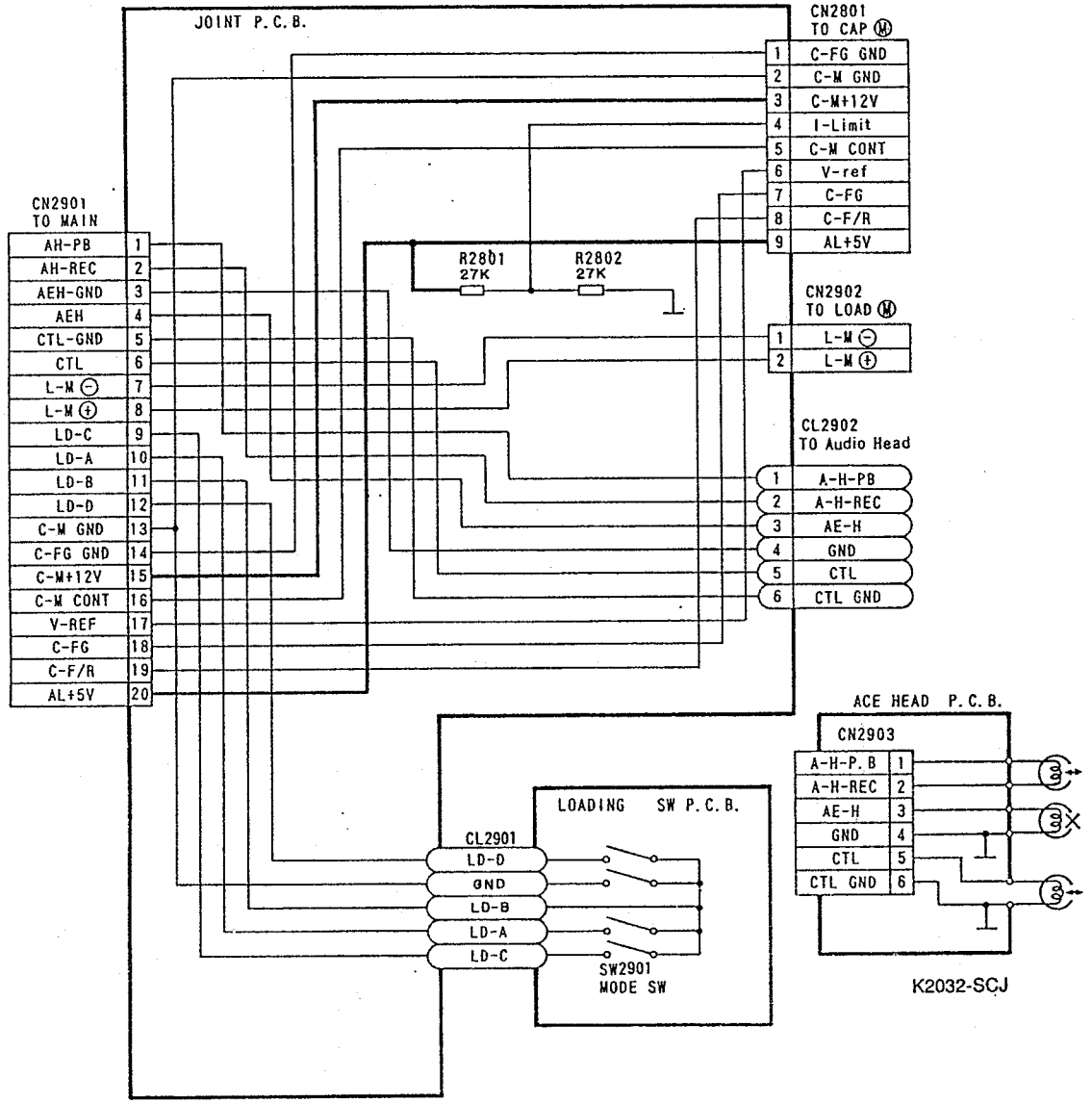

JOINT P.C.BOARD

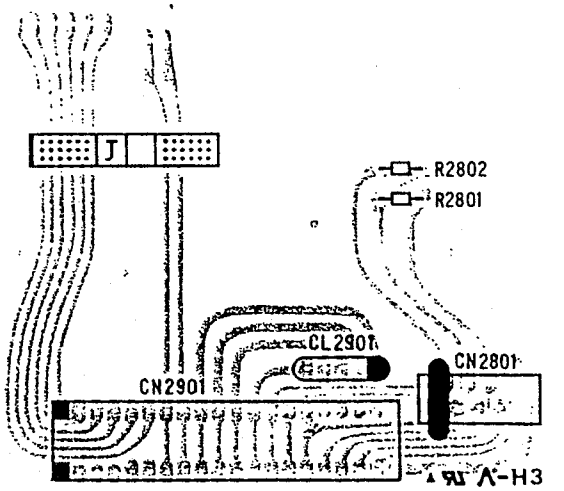

BK7010F01002-A

MODE SW P.C.BOARD

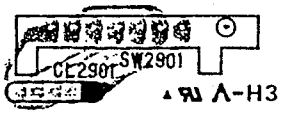

BK7010F01002-B

ACE HEAD P.C.BOARD

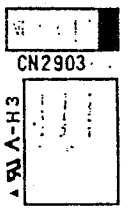

When disassembling the Cassette Up Unit, perform the procedures above.

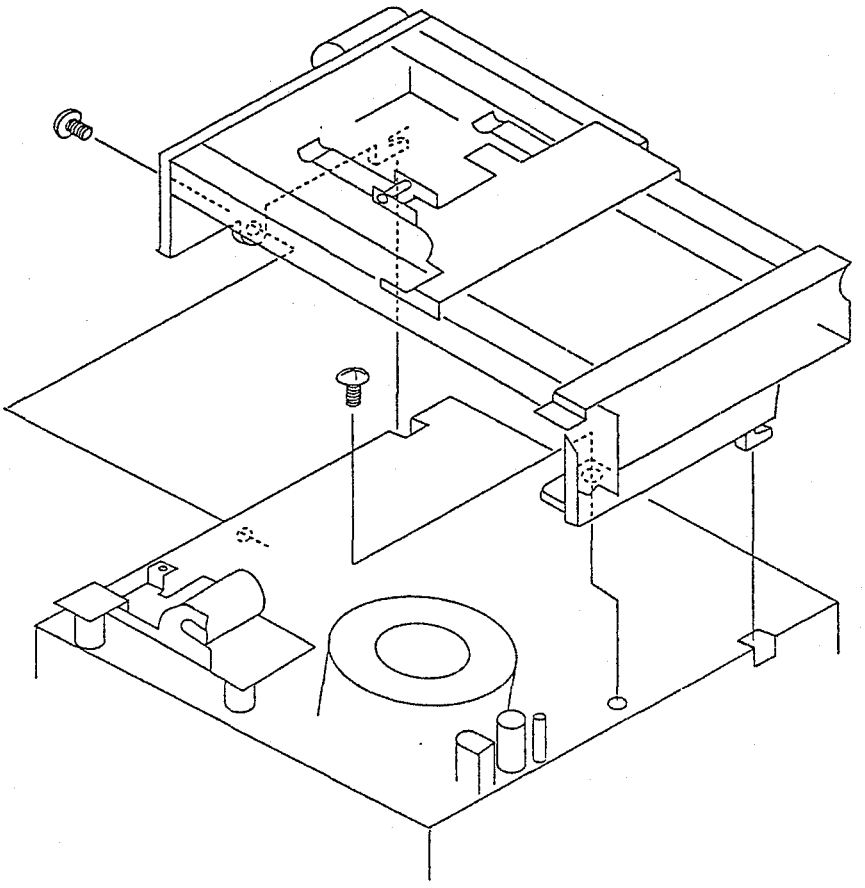

Fig. DM5

DECK EXPLODED VIEW

Mark	Description	Part No.
×××××	Sankoul	FG-84M
■■■■■	Three Bond	TB-1901
●●●●●	Molykote	EM-30LG
▲▲▲▲▲	Suraidasu Oil	#150
●●●●●	Floil	GP-327

VIEW 1

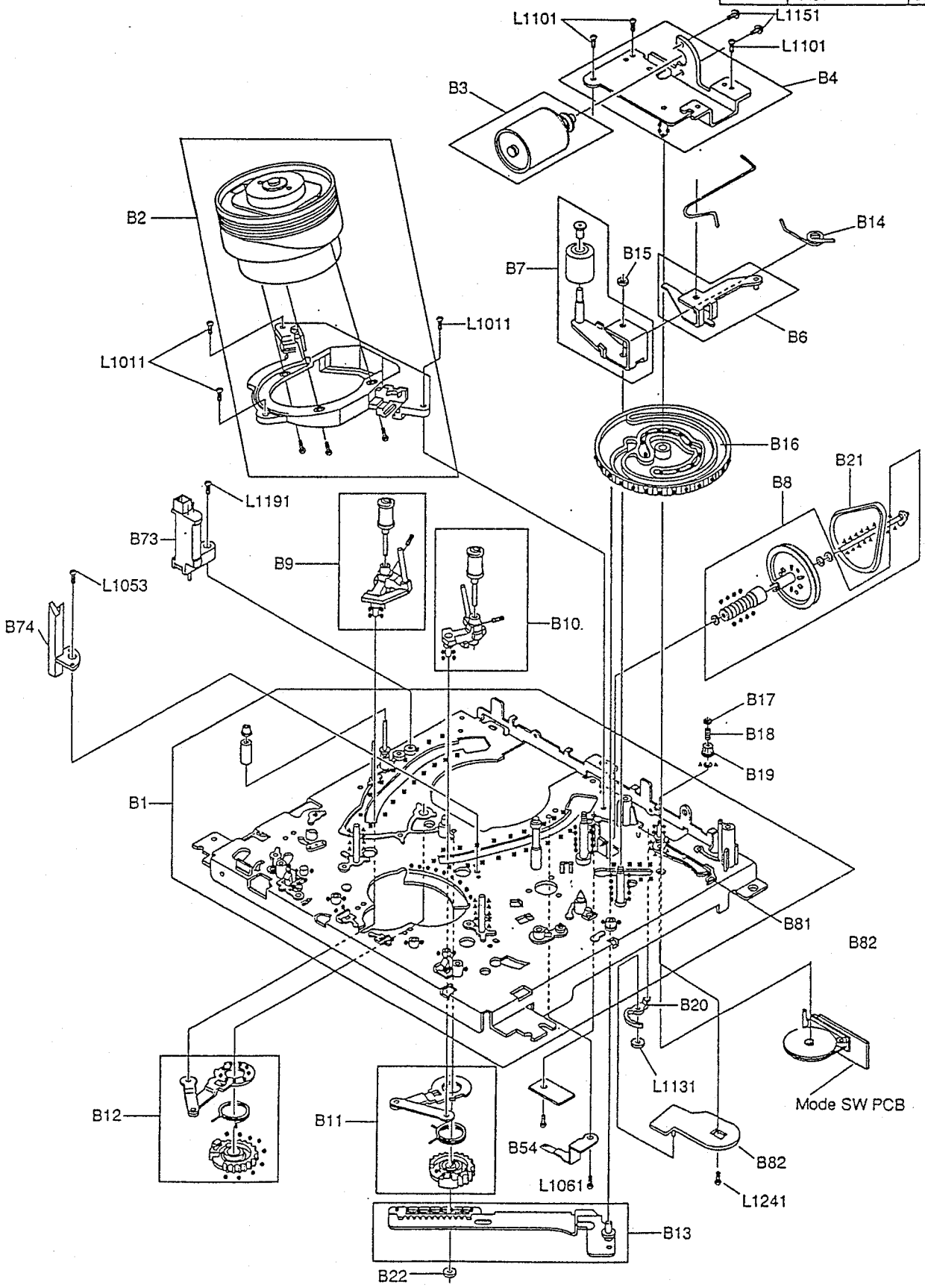

VIEW 2

Mark	Description	Part No.
×××××	Sankoul	FG-84M
■■■■■	Three Bond	TB-1901
●●●●●	Molykote	EM-30LG
▲▲▲▲▲	Suraidasu Oil	#150
●●●●●	Floil	GP-327

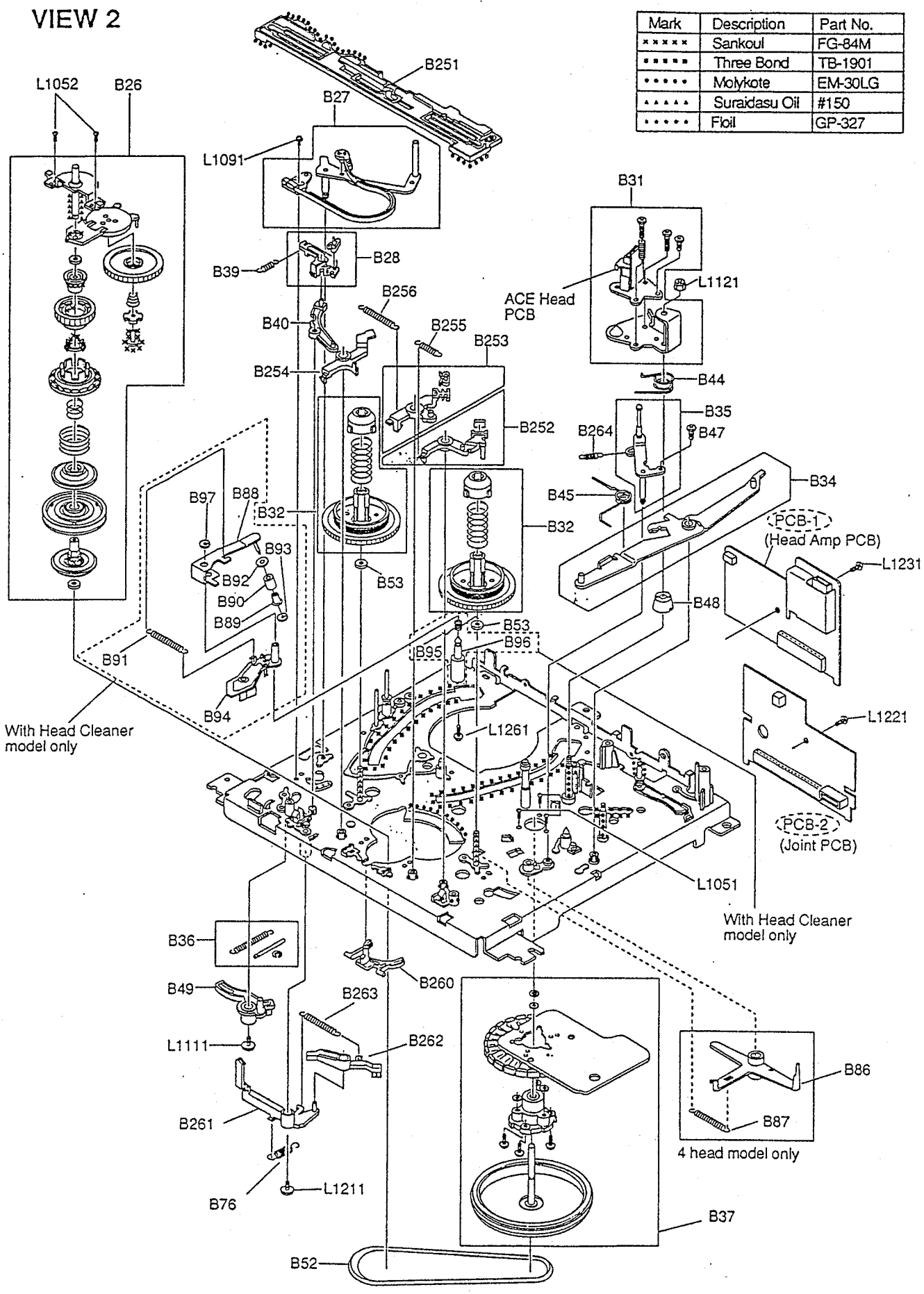

VIEW 3
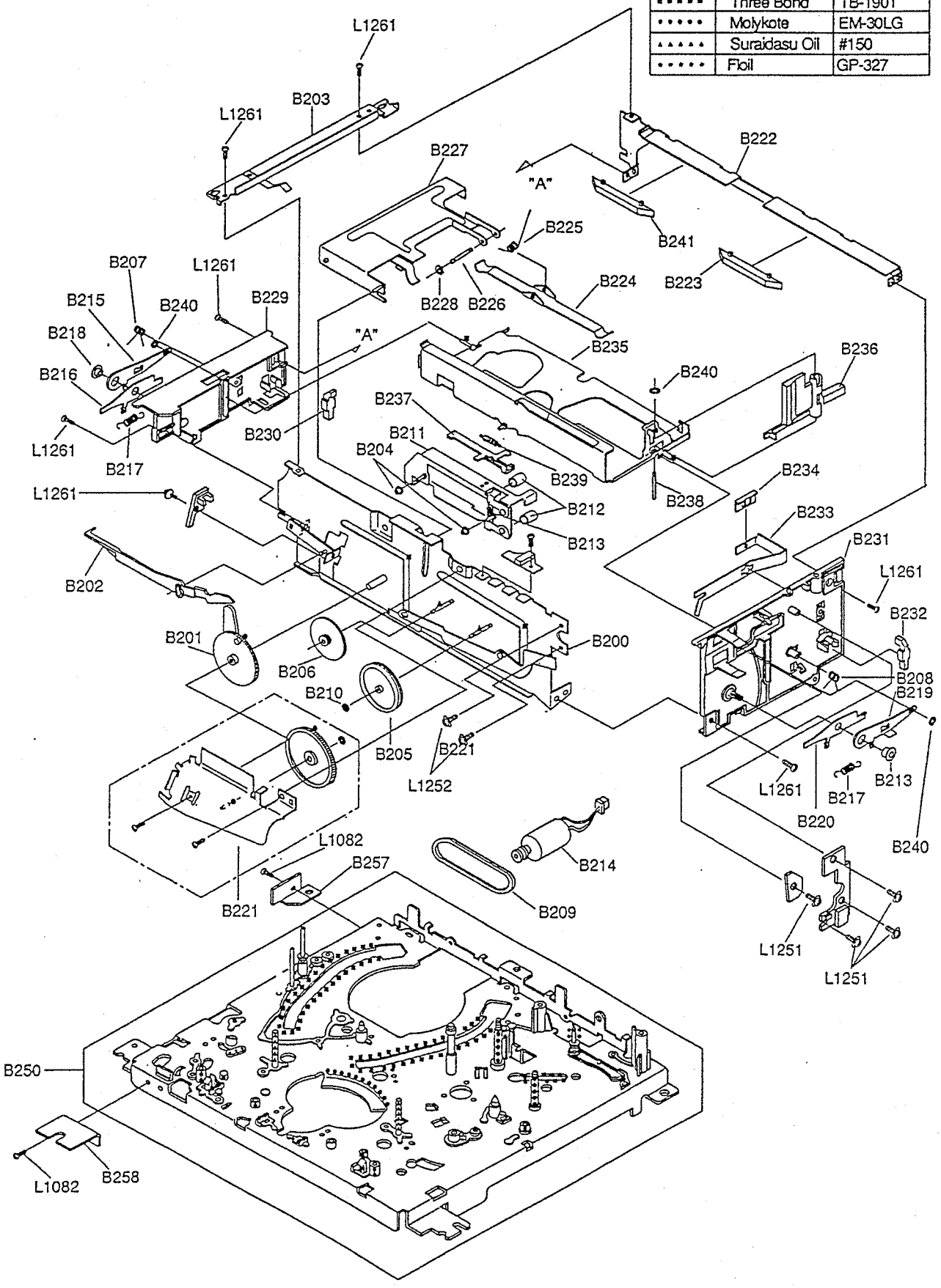
Mark	Description	Part No.
××××××	Sankoul	FG-84M
■■■■■■	Three Bond	TB-1901
••••••	Molykote	EM-30LG
▲▲▲▲▲▲	Suraidasu Oil	#150
▪▪▪▪▪▪	Floil	GP-327